Artos™
Rotary and Linear Absolute Magnetic Encoder System

TRUE ABSOLUTE SYSTEM

COMPACT ROBUST DESIGN

HIGH SPEED AND RESOLUTION

Artos™ is an absolute magnetic encoder system designed for motion control applications, providing position feedback for rotary and linear control loops. Advanced measurement principles and signal processing ensure low position latency, high resolution and reliable operation at high dynamic speeds. The robust mechanical design protects the readhead and magnetic ring or scale against liquid ingress and elevated temperatures, enabling reliable operation in contaminated and high-temperature industrial environments.



Features and benefits

- High accuracy and resolution
- Robust design and great EMC compatibility
- SSI and BiSS C bidirectional communicational protocols
- Suitable for highly dynamic control loops
- Speeds up to 30,000 rpm for rotary and 20 m/s for linear applications
- Compatible with rings, linear or partial arc scales and FlexAB™
- Large ring and scale portfolio for different applications
- Wide installation tolerances
- IP67 protection class
- Self-calibration of eccentricity

MACHINE TOOL | ASSEMBLY LINES | GIMBALS | INDUSTRIAL AUTOMATION | HARSH ENVIRONMENT

General information

Artos™ magnetic encoder system provides true absolute position information immediately after power-on via selected communication protocols. The encoder system offers wide installation tolerances, and with a sealed readhead and ring or scale, ensures robustness and high reliability.

Depending on the application, the encoder system can be used for rotary or linear position measurement. The Artos readhead operates with solid radial rings (SAR), solid linear scales (SAS), flexible scales (DS), and the 360° scale system FlexAB.

The elasto-ferrite layer on the ring or scale is magnetised with both incremental and absolute patterns in a pseudorandom binary sequence (PRBS). This magnetic pattern is read by RLS proprietary sensing technology inside the Artos readhead. The integrated setup LED on the readhead helps the operator in verifying correct installation, and the self-calibration function compensates for eccentricity error after installation.

SAR solid radial rings are designed for rotary applications and are available in exposed and protected versions. In the exposed version, the elasto-ferrite layer is visible. This version is suitable for environments where aggressive liquids are not present. The exposed ring withstands dust, moisture and dirt, but is not intended for applications involving oils, coolants or chemically aggressive substances.

In the protected version, a stainless-steel cover foil is applied over the elasto-ferrite layer to increase mechanical and chemical resistance. The cover foil can be applied in two ways. In the first variant, the foil is wrapped around the circumference of the ring, while the elasto-ferrite layer remains visible from the sides. This configuration protects the sensitive magnetic layer from centrifugal forces and is suitable for high rotational speeds. In the second variant, the foil is applied and welded around the entire circumference of the ring. This fully sealed version provides IP67 protection and withstands significantly higher rotational speeds. It is intended for demanding applications, such as machine tools, where exposure to oils, coolants, greases, non-ferrous particles and high rotational speeds is expected. Magnetic rings are available in outer diameters from 57 mm to 478 mm.

The SAS is a solid linear scale intended for high-accuracy linear applications. It is available in exposed and fully welded versions and provides accuracy up to ±6 µm/m. The same IP protection concept applies to SAS scales as to SAR rings. Exposed versions are suitable for dust, moisture and general industrial conditions. Fully welded versions provide increased resistance to liquids, contaminants (IP67 rated) and mechanical stress and are intended for harsh industrial environments.

The readhead is also compatible with a flexible absolute scale **DS** which is available in lengths up to 32 m. The flexible scale is suitable for linear and partial arc applications from a minimum diameter of 200 mm but does not support full 360° rotation.
For applications requiring full 360° absolute measurement on shafts larger than 500 mm, the readhead can be used with the **FlexAB™** scale system. FlexAB incorporates a special joining mechanism that enables continuous 360° rotation measurement. Further technical details are provided in the FlexAB data sheet, available from the **RLS Media center**.

The robustness of the complete encoder system is defined by the selected ring or scale type together with sealed readhead. This unified protection concept allows consistent system design across rotary, linear or partial-arc applications.

Choose your Artos system

The enclosed readhead is compatible with solid magnetic rings, solid scales and the flexible linear or partial arc absolute scales DS19 and FlexAB system.

Exposed SAR radial ring



SAR ring with cover foil



SAR ring with welded cover foil



Artos™ readhead



+

Partial arc scale DS19



Linear scale DS19



SAS19 exposed scale

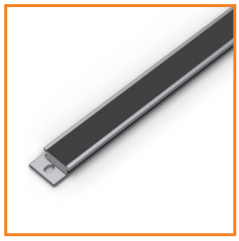

SAS19 fully welded scale



FlexAB magnetic scale system



For detailed mechanical specifications, accuracy data and installation requirements of compatible products, refer to:

- **SARD01** – SAR radial rings
- **ASD01** – DS19 and SAS19 scales
- **FAD01** – FlexAB system

All documents are available in the **RLS Media center**.

Storage and handling

Operating and storage temperature

–40 °C to +85 °C

IP protection

IP67

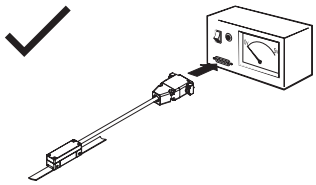

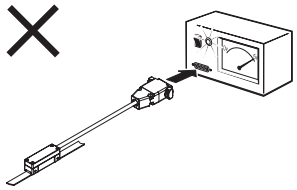

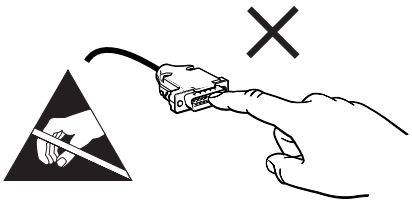



Readhead is ESD sensitive - handle with care.
Do not touch electronic circuit, wires or sensor area without proper ESD protection or outside of ESD controlled environment.

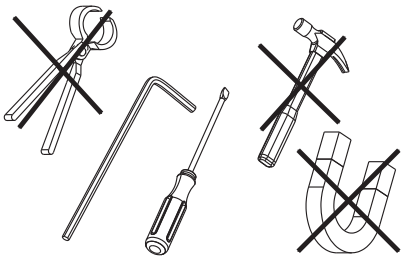

This encoder system is a high performance measuring instrument and should be handled with the same care as any other precision instrument. The use of industrial tools during installation or contact with strong magnets, such as a magnetic base, is not recommended as there is a risk that parts of the system will be damaged and may not function to specifications as a result.

Environmental and operational conditions

Effects of external magnetic field

The magnetic encoder system is sensitive to external magnetic fields. The extent to which the magnetic encoder system is affected depends on the magnitude and direction of the external magnetic field. In particular, the rapidly changing stray magnetic fields affect the system and can change its function. Field strengths greater of 1 mT can cause the system to malfunction, resulting in the readhead reporting an invalid position despite inactive error and warning bits in the detailed status and a green LED.

Magnetic field strengths of more than 25 mT cause irreversible damage to the magnetic ring or scale and must be replaced.

Operation in ultra-high-vacuum applications

Artos encoders were tested for outgassing under ultra-high vacuum (UHV) conditions below 1 × 10-6 Pa for 24 hours at a maximum operating temperature of 85 °C. No prior preparation of the encoders was performed before testing.

No critical outgassing was detected during the test. The maximum observed relative mass loss (RML) was 0.02 %. The UHV exposure had no measurable impact on encoder performance.

Readhead markings



The engraving on the readhead includes a 20-digit part number, a 6-digit serial number and a QR code with a serial number.
A vertical reference line is engraved on rotary readheads only and is indicating the sensor center.

Dimension drawings

Dimensions and tolerances are in mm. Dimensions without tolerance values are in accordance with ISO 2768-m.

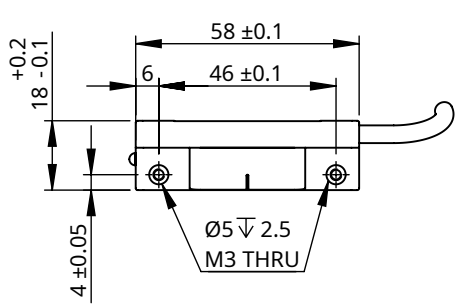

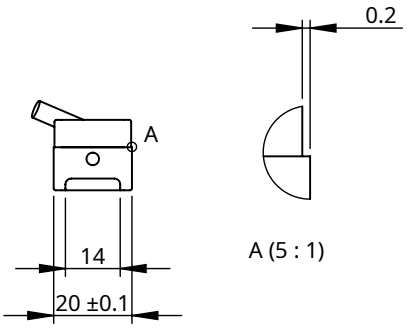

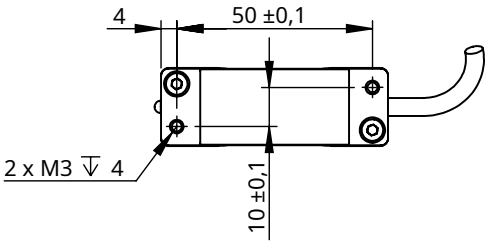

3D models are available on the **Artos product page** and in the **RLS Media Center**.

General tolerances for linear dimensions according to ISO 2768-m			
Tolerance class	up to 6	6-30	30-120
m (medium)	±0.1	±0.2	±0.3

For detailed mechanical specifications, accuracy data and installation requirements of compatible products, refer to:

- **SARD01** – SAR radial rings
- **ASD01** – DS19 and SAS19 scales
- **FAD01** – FlexAB system

All documents are available in the **RLS Media center**.

Installation instructions

The readhead can be installed from the left, right or top, as shown in the drawings below. Plan the installation orientation of the readhead and the magnetic ring or scale in advance. The correct orientation is indicated by the engraving on the ring and the printed marking on the scale. For details on readhead orientation relative to the magnetic ring or scale, refer to the **SARD01**, **ASD01** and **FAD01** data sheets.

M3 fasteners with washers are recommended. Tightening torques must comply with the **Table of recommended fastener tightening torques**.

After mounting the magnetic ring or scale, position the readhead to achieve the specified ride height. The permissible ride height and installation tolerances are defined in data sheets **SARD01**, **ASD01** and **FAD01**.

A dedicated installation tool is recommended to ensure correct alignment of the readhead. If such a tool is not available, a non-magnetic plastic shim may be used to set the ride height. The shim controls the ride height only and does not ensure alignment in tangential, axial, yaw, pitch or roll directions. Mechanical alignment of the readhead must therefore be verified before final tightening.

Before tightening the mounting screws, ensure that the readhead, shim and magnetic ring or scale are fully aligned. After tightening the screws, the shim may be removed.

During installation, rotate the ring or scale and verify that the LED illuminates green at all measuring positions. If the LED does not indicate green status, the installation must be checked and corrected. Further information is provided in the chapter **Status indicator LED.**

Improper mounting of the ring or scale and the readhead can impair the performance or function of the magnetic encoder system and lead to total failure.

Variant A (left side)

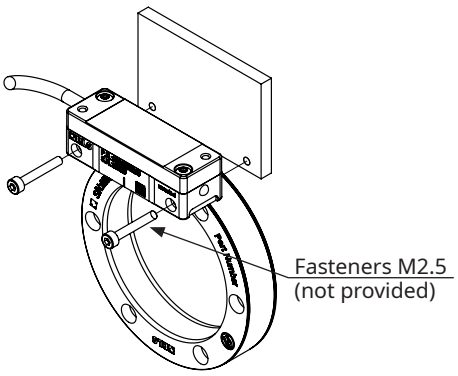

Variant B (right side)

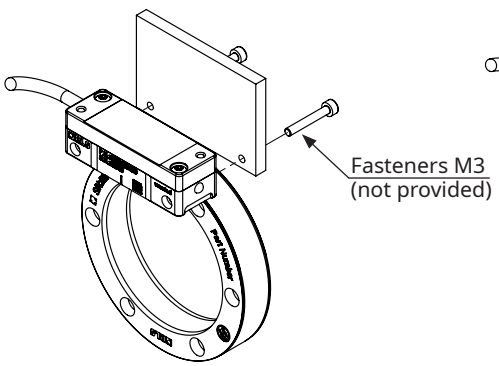

Variant C (top side)

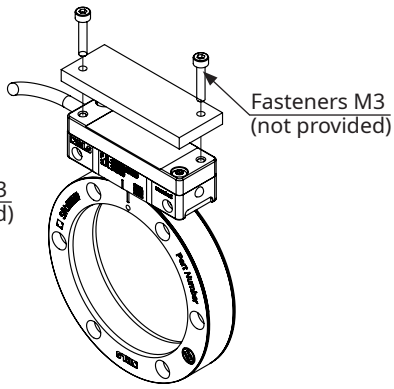

The magnetic encoder system must be used in accordance with the specified degree of protection. The following factors must be taken into account: IP protection class, operating temperature, external magnetic field, mechanical load and EMC compatibility.

Self-calibration

Installation-induced eccentricity compensation on SAR rings

The self-calibration function compensates errors caused by eccentricity, which is a primary contributor to encoder inaccuracy resulting from eccentric ring mounting. However, it does not correct magnetisation errors between different rings. This function reduces the error of one sine wave per revolution and can be initiated by the user via the BiSS C bidirectional communication interface or through the E201-9B USB encoder interface. The self-calibration feature is not available with SSI output.

Requirements:

- A mechanical rotation of the SAR ring by 360°. The rotation can be clockwise or counterclockwise.
- Error and warning-free reading over the entire revolution of the ring (CW and CCW).
- Default time available is 10 seconds. The desired time (up to 40 seconds) can be set via the BiSS C communication interface.
- Maximum speed is 30 rpm.
- Operating temperature inside the specified range (–40 to +85°C).
- Suitable communication interface (BiSS C) or adapter that enables the function to be triggered (E201-9B).
- Eccentricity greater than specified in the table below.

The self-calibration method has inherent limitations. It is only effective if the installation-related eccentricity exceeds a certain threshold value for the corresponding ring size. For example, when using the SAR114 ring, if the measured eccentricity at the outer diameter is greater than ±25 µm (peak-to-peak 50 µm), the self-calibration algorithm will take effect and provide a reliable correction of the eccentricity, as shown in the graph on the next page. In general, the greater the initial eccentricity, the more effectively the self-calibration can compensate for it. However, the eccentricity induced during installation must not exceed the maximum permissible ride height (air gap) specified in SARD01 available at **RLS Media center**. The readhead must work without errors or warnings when moving clockwise and counterclockwise movement over 360°.

Eccentricity correction limit	
SAR057	±15 µm
SAR080	±20 µm
SAR114	±25 µm
SAR162	±30 µm
SAR229	±35 µm
SAR325	±40 µm
SAR478	±50 µm

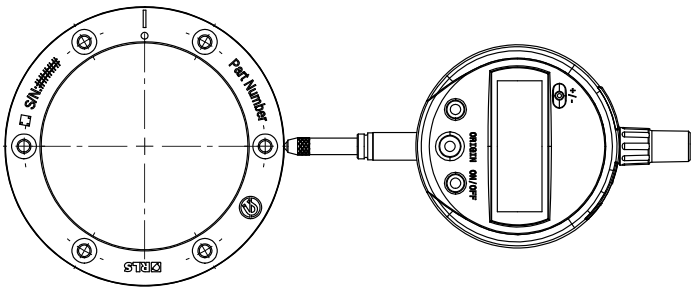

Figure shows measurement of the actual radial runout after installation.

The self-calibration method significantly reduces the effects of eccentricity. The graph below illustrates the system accuracy before and after calibration. In this example, the eccentricity value is approximately ±35 µm.

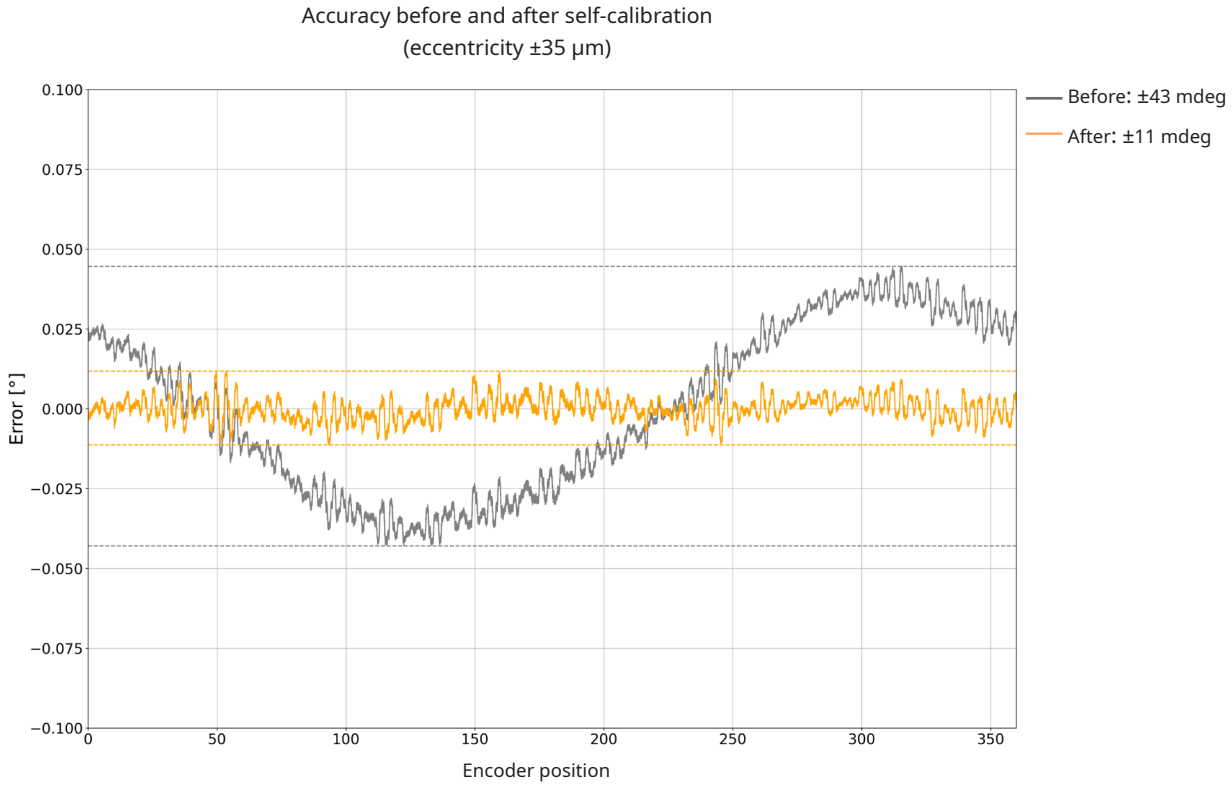

For details on Artos BiSS C bidirectional register access and other funcitonalities please refer to the application note APP07 available at **RLS media center.**

Technical specifications

System specifications

Type of absolute measurement	Pseudorandom binary sequence (PRBS) absolute code; RLS proprietary sensor technology
Hysteresis	<3.5 µm at nominal ride height SAR057: 25 arcsec SAR081: 18 arcsec SAR114: 13 arcsec SAR162: 9 arcsec SAR229: 6 arcsec SAR325: 4 arcsec SAR478: 3 arcsec
Accuracy	Refer to **SARD01**, **ASD01** and **FAD01** data sheets
Unidirectional repeatability	<1.5 µm
Resolution	Rings: up to 23 bits binary resolution (depends on the ring size) Magnetic scales: up to ~0.100 µm See **Table of available resolutions.**
Sensor and processing latency	<1 µs
Internal loop refresh rate	91 kHz
Maximum speed during power up	Rotary: 500 rpm Linear: 10 m/s

Electrical data

Power supply	From 4.75 V to 30 V (voltage on readhead, consider voltage drop over cable)
Reverse polarity protection	Yes
Set-up time after switch-on	<200 ms
Power consumption (without load)	0.7 W
Communication standard	Differential line driver signal (RS422)
Output load	±40 mA
ESD protection	HBM, max. ±2 kV

Mechanical data

Material	Aluminium (anodised)
Mass	70 g (with 1 m cable, no connector)

Environmental data

Operating and storage temperature	–40 °C to +85 °C
Vibrations (55 Hz to 2000 Hz)	30 g m/s^2 (IEC 60068-2-6)
Shocks (11 ms)	100 g (IEC 60068-2-27)
Humidity	100 % (condensation permitted)
EMC Immunity	IEC 61000-6-2
EMC Emission	IEC 61000-6-4
Environmental sealing	IP67 (according to IEC 60529)
Maximum external magnetic field during operation	1 mT

Cable

Cable type	8 core, PUR high flexible cable, braided shield, pairs not twisted
Outer diameter	Maximum 4.5 mm
Wires AWG	White and brown wires: 0.14 mm^2, 26 AWG, 0.14 Ω/m
	Other wires: 0.08 mm^2, 28 AWG, 0.23 Ω/m
Cable bending radius	Dynamic: 50 mm
	Static: 10 mm
Mass	34 g/m
Durability	10 million cycles at 50 mm bend radius
Torsion	Continuous torsion not allowed
Maximum cable length on readhead	15 m

Cable bending radius

Fixed laying application

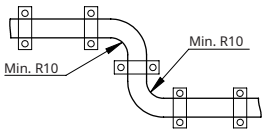

Continuously flexible application

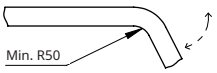

The cable requires adequate strain relief to ensure its integrity and avoid lateral forces that could damage the cable entry. The bending radius of the cable also applies to the connector side.

Cable installation

Dimensions and tolerances are in mm. Dimensions without tolerance values are in accordance with ISO 2768-m.

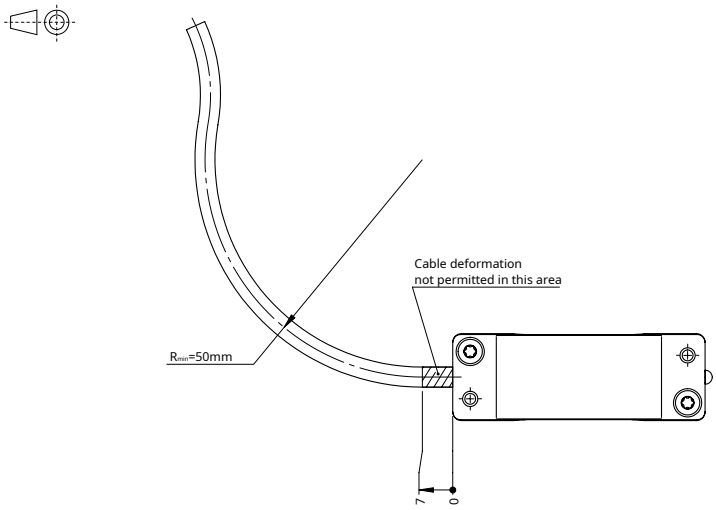

Extension cable

The extension cable is optional and can be supplied by RLS. Refer to the **Extension cable** for options.

Electrical connections

Pinout

Function	Signal	Wire colour (flying leads)	9 pin D type plug	M12 8-way
Power	5 V	Brown	5	2
	0 V	White	9	8
Serial communication	CLK+ / MA+	Green	2	3
	CLK– / MA–	Yellow	3	4
	DATA+ / SLO+	Blue	6	7
	DATA– / SLO–	Red	7	6
Reserved	-	Pink	-	-
	-	Grey	-	-
Shield	Shield	Bare wire	Case	Case

9-way D-type connector (male type)

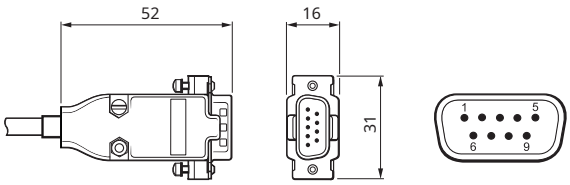

M12 8-way sealed (overmould) connector (male type)*

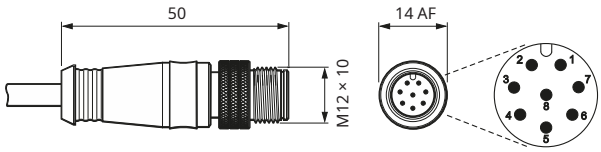

* Subject to availability. Available with overmoulded or metal housing connector version.

Shield connection

The following figure shows the recommended shield termination in order to ensure electromagnetic compatibility.

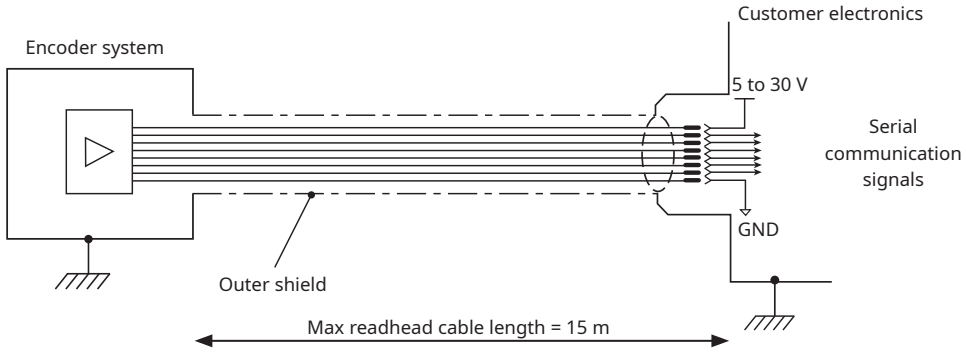

The encoder housing is galvanically connected to the connector housing. To achieve EMC compliance, the encoder system must be correctly integrated. In particular, attention to shielding arrangements is essential.

Status indicator LED

Once the ring or magnetic scale has been installed, the readhead can be easily mounted on the machine using the **LED setup indicator**. The LED indicator shows the internal status of the encoder and is used to facilitate the installation and diagnosis of the encoder system. According to the table **Detailed status description** certain errors are latched, resulting in LED indicating error status persistently. To clear latched error statuses, communication with readhead or readhead power cycle is required.



Slow flashing of LED indicates that the encoder is receiving power, but communication between the encoder and the controller has not yet been established. The error status has a higher priority than the warning status in the LED signaling. The signaling of LED may differ from the encoder status signaled by the controller. In case of error or warning the LED remains red or orange for at least 200 ms.

LED Status		Status	Description
●	**Green**	Normal operation	Position data is valid.
●	**Orange**	Warning	• The internal temperature is near operational limits. • The encoder system is near operational limits. For details please check possible causes under the Error status.
●	**Red**	Error	Position data is not valid. Possible causes: • The distance between the readhead and the magnetic scale is too large. • The readhead is out of alignment with the ring or magnetic scale or they are demagnetised. • Incorrect orientation of the readhead and ring or magnetic scale. • The encoder speed is out of operational limits.
●●●●●	**Fast red flashing**	Error	Position data is not valid. Internal system error.
● ●●	**Irregular flashing**	/	Power supply too low.
●●● ●●● ●●●	**Slow red, green or orange flashing**	/	The communication has not been established.
●●● 3 s ●●● 3 s ●●● 3 s	**3 sec. fast flashing**	/	Self-calibration result - see chapter **Self calibration.**
○	**No light**	/	No power supply.

The LED signal statuses listed in the table above do not indicate non-optimal installation of the readhead, e. g. an accuracy outside the specified range. To ensure optimal installation, it is recommended to use the designated installation tool.

During installation, it is advisable to rotate the ring or move the magnetic scale in both directions over the entire range of motion to observe the encoder status on the LED (the maximum rotational speed is 5 rpm or 50 mm/s). As soon as the LED indicator remains green over the entire range of motion, this indicates that the encoder is correctly installed.

LED can be switched OFF, defined by the part number. Only available for BiSS C bidirectional protocol.

Troubleshooting

If the readhead reports an error during operation due to incorrect decoding of the absolute position on the magnetic ring/scale, this indicates a serious problem. Serious problems include incorrect installation or a damaged magnetic pattern on the ring or scale. To determine the cause of the problem, please proceed as follows:

- Make sure that the part number on the readhead and the ring or scale match the required combination. The valid combination of ring and readhead can be verified with the first 6 letters of the part number.
- Verify that the installation matches the specification of the encoder for the orientation of the readhead relative to the ring/ scale (ride height/radial offset, lateral/axial offset, centerline/ tangential, roll, pitch and yaw offsets).
- If possible, check the error location on the magnetic ring/scale with the magnetic viewer for an abnormal pattern in the magnetic code.
- Check the power supply. This is especially important for longer cable lengths. Take into account the voltage drop over the cable. Refer to the **Minimum input voltage vs. cable length.**
- Refer to **Maximum speed calculator for rings** or **Maximum speed calculator for scales** to ensure that the required rotational/linear speed matches the selected parameters of the readhead (resolution and minimum edge separation values) and ring dimension. This is important if the ABZ channel is enabled in parallel to the BiSS/SSI absolute channel.

BiSS C communication interface

The absolute position data and the status are available via the BiSS C bidirectional protocol. The length of the position data varies depending on the combination of SAR ring, linear/partial arc, or FlexAB scale and selected resolution. In combination with the SAR ring, the length of the position data is up to 23 bits. In combination with the scale or FlexAB, the length of the position data is up to 29 bits. The position data is always right-aligned, MSB first and without padding bits on the LSB. The absolute position is followed by 2 general status bits, which are active low (error and warning) and 6 bits CRC (inverted).

BiSS is implemented for point-to-point operation, multiple slaves are not supported. The readhead supports bidirectional communication. Additional data can be read from the encoder, as well as sending different commands such as zeroing, triggering self-calibration, etc.).

Electrical connection

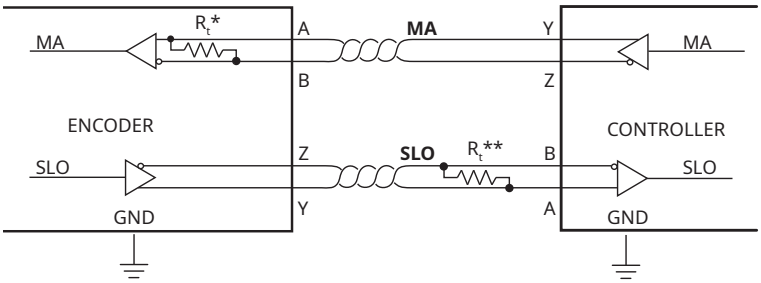

Signals	
MA	Master clock.
SLO	Slave out. Data is output on rising edge on MA.

* The MA and SLO lines are 5 V RS422 compatible differential pairs. The termination resistor on the MA line is integrated inside the encoder.

** Termination at the controller is required, if the total cable length is longer than 5 m. The nominal impedance of the cable is 120 Ω.

BiSS C timing diagram

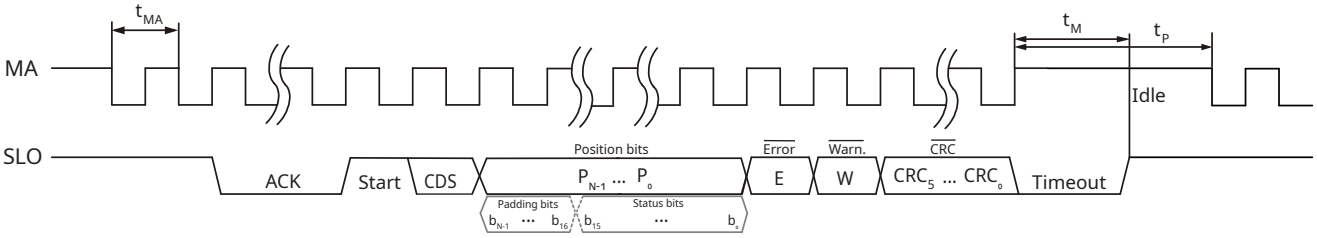

N = number of position bits

In case of an error, the position data field is replaced by the detailed status described on **page 18.** The detailed status is 16 bits long and right-aligned. Other unused bits in the position field become padding bits and are set to zero. The exact length of the position data is determined by the combination of ring/scale and resolution. See **Table of available resolutions**.

BiSS C Parameters

Interface type	BiSS C bidirectional (point-to-point)
Signal level	RS422
Position data encoding	Pure binary
Max MA frequency	5 MHz
Min MA frequency	500 kHz
Length of position data	Depends on the resolution. See **Table of available resolutions.**
Length and type of status data	2 bits (Error, Warning). Active low. Error/warning descriptions, can be found in the **LED table**.
CRC length and type	6 bits (inverted bit output - polynomial 0x43)
ACK length	13 bits
Communication delay	3.2 µs at 5 MHz MA freq.; otherwise 16 MA clock periods
Timeout	≥15 µs or when the SLO line goes high
Data frame rate	Up to 40 kHz

For details on Artos BiSS C bidirectional register access and other funcitonalities please refer to the application note APP07 available at **RLS media center.**

SSI communication interface

The absolute position data and the status are available via the SSI protocol. The length of the position data varies depending on the combination of SAR ring, linear/partial arc, or FlexAB scale and selected resolution. In combination with the SAR ring, the length of the position data is up to 23 bits. In combination with the scale or FlexAB, the length of the position data is up to 29 bits. The position data is always right-aligned, MSB first and without padding bits on the LSB. The absolute position is followed by 2 general status bits, which are active low (error and warning), and 16 bits with detailed status.

Electrical connection

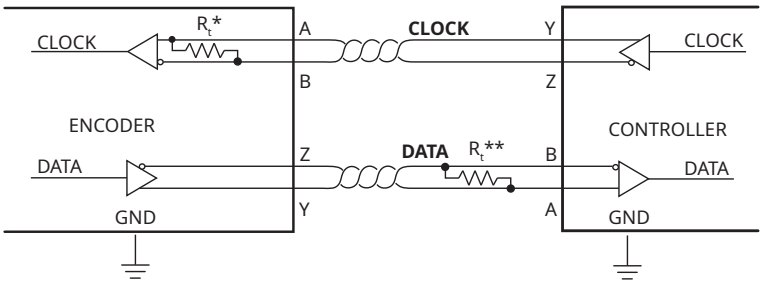

* The CLOCK and DATA lines are 5 V RS422 compatible differential pairs. The termination resistor on the CLOCK line is integrated in the encoder.
** Termination at the controller is required if the total cable length is more than 5 m. The nominal impedance of the cable is 120 Ω.

SSI timing diagram

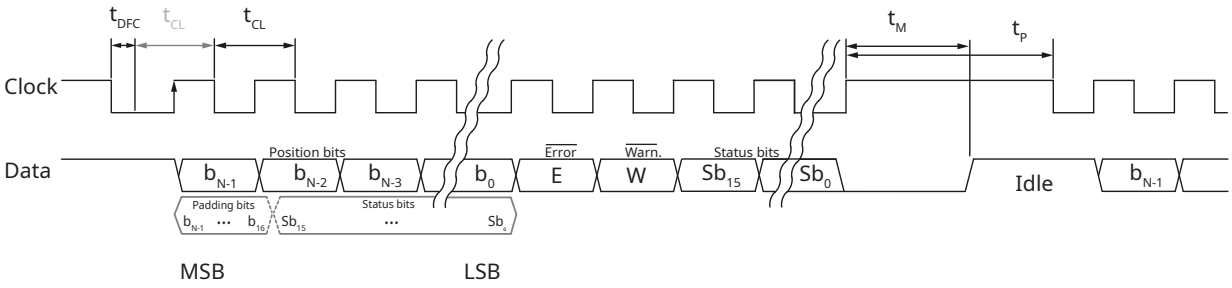

N = number of position bits

The detailed status bits follow the warning bit in the data frame. In case of error, the position data field is also replaced by the detailed status described on **page 18**. The detailed status is 16 bits long and right-aligned. Other unused bits in the position field become padding bits and are set to zero. The exact position data length is determined by the ring/scale and resolution combination. See **Table of available resolutions.**

The controller requests the position and status data of the encoder by sending a pulse train to the Clock input. The Clock signal always starts from high. The first falling edge of the Clock latches the last position data available and on the first rising edge of the Clock the most significant bit (MSB) of the position is transmitted to the Data output. If the time t_{DFC} is extended for additional 2 µs, the maximum clock frequency limit is 2.5 MHz instead of 500 kHz. The Data output should then be read on the following falling edge. On subsequent rising edges of the Clock signal the next bits are transmitted.

After the transmission of the last bit the Data output goes to low. When the t_M time expires, the Data output goes high. The Clock signal must remain high for at least t_P before the next reading can take place.

While reading the data, the half of a Clock period t_{CL} must always be less than t_M. However, reading the encoder position can be terminated at any time by setting the Clock signal to high for the duration of t_M.

SSI Parameters

Interface type	SSI unidirectional (point-to-point)
Signal level	RS422
Position data encoding	Pure binary
Max CLOCK frequency	500 kHz (2.5 MHz with first clock delay function on the controller) - tDFC
Min CLOCK frequency	80 kHz
Length of position data	Depends on the resolution. See **Table of available resolutions.**
Length and type of status data	2 bits (Error, Warning). Active low. Error/warning descriptions, can be found in the **LED table.**
Timeout t_M	≥20 µs or when the DATA line goes high
Max request rate at highest resolution	Up to 25 kHz
Delay first clock t_{DFC}	2 - 10 µs
Pause time t_P	t_M + 2 µs

Detailed status description

BiSS and SSI - detailed status replaces position data while error bit is active.

Bit	Description of error/warning	Error / Warning	Clearing
b15	Reserved	/	/
b14	Temperature warning. Temperature has exceeded the upper specified limit (85 °C).	Warning	When absent
b13	Signal warning. The signals from the sensor are distorted. The encoder performance (noise, accuracy, ...) may not be as specified. Check if the readhead is installed within specification. The encoder system may be damaged.	Warning	When absent
b12	Reserved	/	/
b11	Decoding warning. The amplitude on the absolute sensor is too close to the limit for reliable decoding. Check the installation of the readhead and try to improve it.	Warning	When absent
b10	Reserved	/	/
b9	Reserved	/	/
b8	Sensors mismatch error. The positions of the absolute and incremental sensors do not match. This is likely due to a damaged ring/scale or external magnetic fields. It could be a result of using incompatible rings/scales.	Error	On communication

Detailed status continued

Bit	Description of error/warning	Error /Warning	Clearing
b7	Decoding error. The amplitude on the absolute sensor is too low for reliable decoding. Check the installation of the readhead.	Error	When absent
b6	Signal error. The signals from the sensor are distorted beyond the ability to be reliably interpreted. Check if the readhead is installed within specification. Check the orientation of the ring/scale relative to the readhead (the engraving sides must match). The encoder system may be damaged.	Error	On communication
b5	Reserved	/	/
b4	System error. Malfunction inside the circuitry. To reset the System error bit, try to cycle the power supply while the rise time is shorter than 20 ms. If the error persists, **contact RLS**.	Error	On reset
b3	Reserved	/	/
b2	Reserved	/	/
b1	Position uninitialized error. The conditions for calculating the valid absolute position have not yet been met. The error should clear on communication. If it persists, this could be due to the following: • The readhead mounting is incorrect. • The ring/scale is damaged. • The ring rotates at more than 500 rpm during the power up sequence or after the readhead is trying to recover from the error. • The linear speed is above 10 m/s during the power up sequence or after the readhead is trying to recover from the error. This error always sets in conjunction with other errors (except for decoding error). The error may also be set for a short period of time on first startup. However, it should clear automatically. If it does not, see reasons above.	Error	On communication (except first time after startup)
b0	Reserved	/	/

Cable length compensation

The readhead needs 70 ns to respond to incoming clocks (t_{RESP}). The change on the Data signal is delayed by 70 ns after the rising edge on the Clock line. An additional delay is caused by the time the signal takes to propagate through the cable to the readhead and back (t_{PROP}). This delay is typically 14 ns per 1 meter cable. The total cable length from the encoder to the receiver must be considered.

The total delay (t_{DELAY}) is calculated as in the formula below.

A proper implementation of BiSS Master should automatically measure t_{DELAY} and adjust the internal timing to compensate for it.

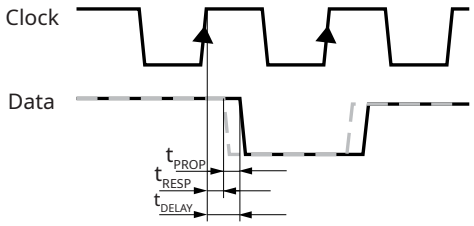

$$t_{DELAY} = t_{RESP} + t_{PROP} \times \text{cable length}$$

Minimum input voltage vs. cable length

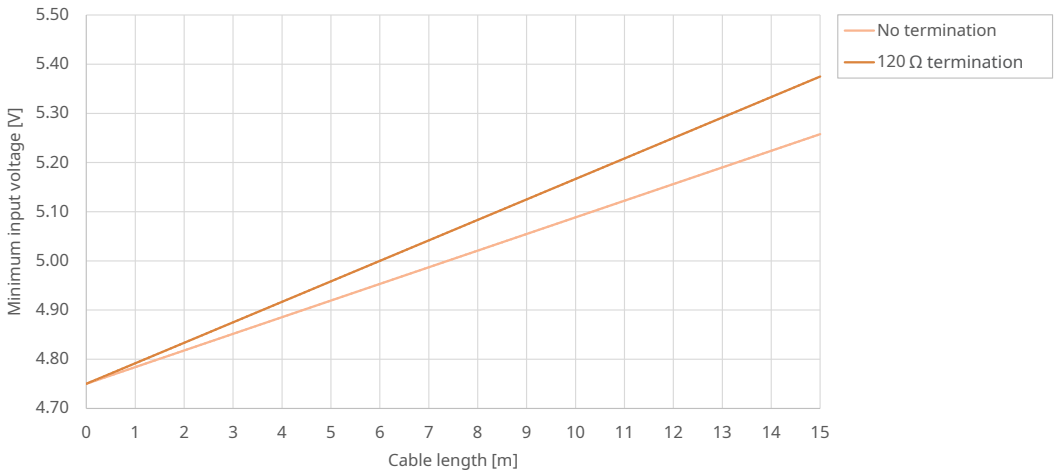

Current consumption vs. power supply

Measurement was made on the readhead with a 1 m long cable without termination.

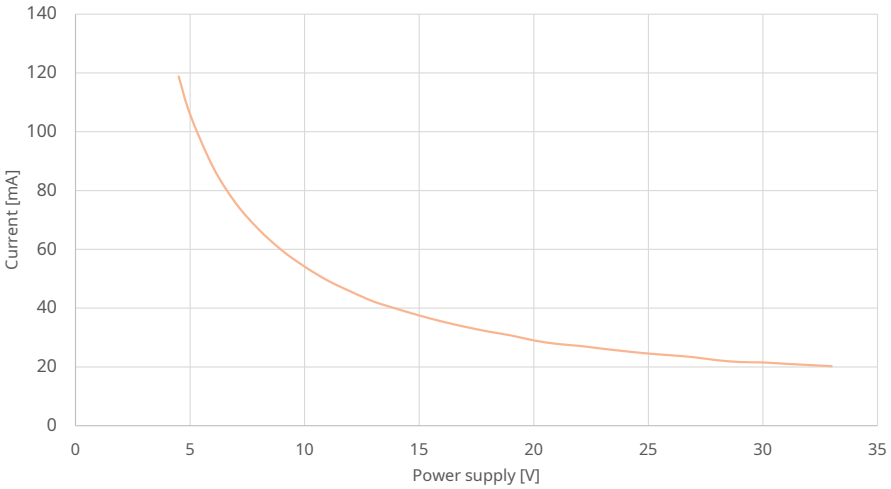

Maximum frequency vs. cable length

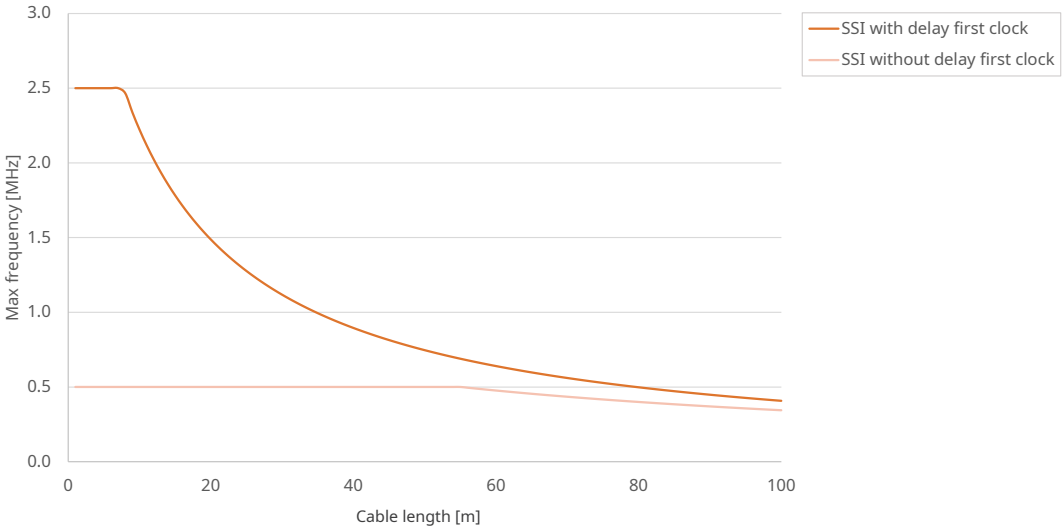

Cable lenght [m]	**SSI** [MHz]	**SSI + delay first clock** [MHz]
1	0.50	2.50
2	0.50	2.50
3	0.50	2.50
4	0.50	2.50
5	0.50	2.50
6	0.50	2.50
7	0.50	2.50
8	0.50	2.47
9	0.50	2.34
10	0.50	2.22
11	0.50	2.12
12	0.50	2.02
13	0.50	1.94
14	0.50	1.86
15	0.50	1.78

Cable length L [m]	**Tolerance** [mm]
≤ 2	+30 / –0
2 < L ≤ 7	+40 / –0
7 < L ≤ 15	+50 / –0

Part numbering

Readhead

DHR 057 DB 23B A A S 10D A 00

Encoder family

DHR - Absolute readhead, enclosed, for SAR rings
DHL - Absolute readhead, enclosed, for linear and partial arc scales
DHF - Absolute readhead, enclosed, for FlexAB type scale

Compatibility

Ring OD

057 - 57 mm
081 - 81 mm
114 - 114.2 mm
162 - 162 mm
229 - 229 mm
325 - 325 mm
478 - 478 mm

FlexAB system

xxx - Refer to the **FlexAB calculator**, to determine the unique value.

Linear and partial arc scale

001 - DS19 (≤ 2 m, minimum bending diameter 200 mm, ±10 µm accuracy)
002 - DS19 (2 ≤ 8 m, minimum bending diameter 630 mm, ±10 µm accuracy)

Linear scale

003 - DS19 (8 ≤ 32 m, no bending allowed, ±15 µm accuracy)
004 - SAS19 (up to 2.46 m, ±6 µm accuracy)

Output type

DB - BiSS C bidirectional output
SC - SSI output

Resolution

For rings (in CPR)

23B - 8,388,608	**18B** - 262,144	**0DB** - 1,024,000	**0IB** - 512,000
22B - 4,194,304	**17B** - 131,072	**0EB** - 737,280	**0JB** - 360,000
21B - 2,097,152	**0AB** - 5,898,240	**0FB** - 368,640	**0KB** - 256,000
20B - 1,048,576	**0BB** - 2,949,120	**0GB** - 184,320	**0LB** - 180,000
19B - 524,288	**0CB** - 1,474,560	**0HB** - 720,000	**0MB** - 1,504,000

For linear, partial arc scales and FlexAB

14U - 0.122070313 µm	**10U** - 1.953125 µm	**06U** - 31.25 µm	**8D0** - 0.25 µm	**010** - 10 µm
13U - 0.244140625 µm	**09U** - 3.90625 µm	**05U** - 62.5 µm	**001** - 1.0 µm	**10D** - 0.1 µm
12U - 0.48828125 µm	**08U** - 7.8125 µm	**04U** - 125 µm	**002** - 2 µm	**20D** - 0.2 µm
11U - 0.9765625 µm	**07U** - 15.625 µm	**4D0** - 0.5 µm	**005** - 5 µm	

Cable length

10D - 1 m
20D - 2 m
30D - 3 m
50D - 5 m

The maximum cable length is 15 m. If an extension cable is used, the readhead cable length + extension cable length must not exceed 15 m.

Connector type

A - 9 pin D type plug
F - Flying lead (no connector)
W - M12 male overmould/metal housed connector *

* Subject to availability. The M12 overmould and M12 metal housing connectors are used interchangeably.

Special requirements

00 - No special requirements
02 - LED off by default (only for BiSS C output)

Not all part number combinations are valid. Refer to the table of available combinations on the following pages.

Table of available resolutions (DHR readhead with SAR rings)

Readhead	Outer diameter	Pole number	CPR (bits)	Position data length	Resolution part number
DHR	057	90	1,474,560	21	0CB
			737,280	20	0EB
			368,640	19	0FB
			184,320	18	0GB
			180,000	18	0LB
			1,048,576 (20)	20	20B
			524,288 (19)	19	19B
			262,144 (18)	18	18B
			131,072 (17)	17	17B
	081	128	2,097,152 (21)	21	21B
			1,048,576 (20)	20	20B
			524,288 (19)	19	19B
			262,144 (18)	18	18B
			256,000	18	0KB
	114	180	2,949,120	22	0BB
			1,474,560	21	0CB
			737,280	20	0EB
			368,640	19	0FB
			360,000	19	0JB
			2,097,152 (21)	21	21B
			1,048,576 (20)	20	20B
			524,288 (19)	19	19B
			262,144 (18)	18	18B
	162	256	4,194,304 (22)	22	22B
			2,097,152 (21)	21	21B
			1,048,576 (20)	20	20B
			524,288 (19)	19	19B
			512,000	19	0IB
	229	360	5,898,240	23	0AB
			2,949,120	22	0BB
			1,474,560	21	0CB
			737,280	20	0EB
			720,000	20	0HB
			4,194,304 (22)	22	22B
			2,097,152 (21)	21	21B
			1,048,576 (20)	20	20B
			524,288 (19)	19	19B
	325	512	8,388,608 (23)	23	23B
			4,194,304 (22)	22	22B
			2,097,152 (21)	21	21B
			1,048,576 (20)	20	20B
			1,024,000	20	0DB
	478	752	8,388,608 (23)	23	23B
			4,194,304 (22)	22	22B
			2,097,152 (21)	21	21B
			1,048,576 (20)	20	20B
			1,504,000	21	0MB

Further information can be found in **SARD01** data sheet.

Table of available combinations (DHR readhead with SAR rings)

Series	Outer diameter	Output type	Resolution	N/A	N/A	N/A	Cable length	Connector type	Special requirements
DHR	057	DB	17B / 18B / 19B / 20B / 0LB / 0GB / 0FB / 0EB / 0CB	A	A	S	10D / 20D / 30D / 50D	A / F / W	00 / 02
	081		18B / 19B / 20B / 21B / 0KB						
	114		18B / 19B / 20B / 21B / 0JB / 0FB / 0EB / 0CB / 0BB						
	162		19B / 20B / 21B / 22B / 0IB						
	229		19B / 20B / 21B / 22B / 0HB / 0EB / 0CB / 0BB / 0AB						
	325		20B / 21B / 22B / 23B / 0DB						
	478		23B / 22B / 21B / 20B / 0MB						
	057	SC	17B / 18B / 19B / 20B / 0LB / 0GB / 0FB / 0EB / 0CB						00
	081		18B / 19B / 20B / 21B / 0KB						
	114		18B / 19B / 20B / 21B / 0JB / 0FB / 0EB / 0CB / 0BB						
	162		19B / 20B / 21B / 22B / 0IB						
	229		19B / 20B / 21B / 22B / 0HB / 0EB / 0CB / 0BB / 0AB						
	325		20B / 21B / 22B / 23B / 0DB						
	478		23B / 22B / 21B / 20B / 0MB						

Table of available resolutions (DHL/DHF readhead with SAS19 or DS19 scale/FlexAB scale)

Readhead	Linear/partial arc scale	Interpolation factor	Resolution in µm	Position data length	Resolution part number
DHL / DHF	001 / 002 / 003 / 004 / xxx	2^{14}	0.122070313	28	14U
		2^{13}	0.244140625	27	13U
		2^{12}	0.48828125	26	12U
		2^{11}	0.9765625	25	11U
		2^{10}	1.953125	24	10U
		2^{9}	3.90625	23	09U
		2^{8}	7.8125	22	08U
		2^{7}	15.625	21	07U
		2^{6}	31.25	20	06U
		2^{5}	62.5	19	05U
		2^{4}	125	18	04U
		8000	0.25	27	8D0
		4000	0.5	26	4D0
		2000	1	25	001
		1000	2	24	002
		400	5	23	005
		200	10	22	010
		20000	0.1	29	10D
		10000	0.2	28	20D

Table of available combinations (DHL/DHF readhead with SAS19 or DS19 scale/FlexAB scale)

Series	Linear/partial arc scale	Output type	Resolution	N/A	N/A	N/A	Cable length	Connector type	Special requirements
DHL / DHF	001 / 002 / 003 / 004 / xxx	DB	14U / 13U / 12U / 11U / 10U / 09U / 08U / 07U / 06U / 05U / 04U / 4D0 / 8D0 / 001 / 002 / 005 / 010 / 10D / 20D	A	A	S	10D / 20D / 30D / 50D	A / F / W	00 / 02
		SC	14U / 13U / 12U / 11U / 10U / 09U / 08U / 07U / 06U / 05U / 04U / 4D0 / 8D0 / 001 / 002 / 005 / 010 / 10D / 20D						00

Extension cable

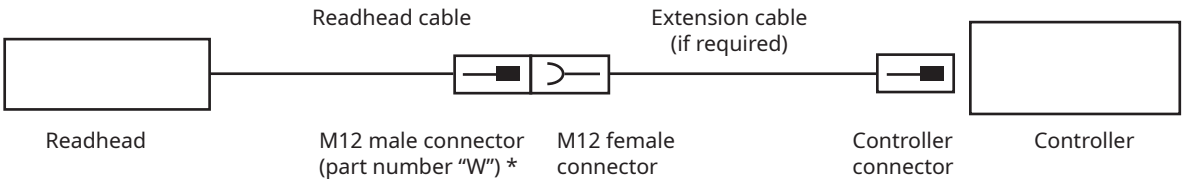

* Input of the extension cable is M12 female overmould connector. When using an extension cable, the Artos readhead must be ordered with M12 (part number “W”) connector.

EC 12000 C A 00

Extension Cable

EC - Extension cable

Cable length *

04000 - 4 m
08000 - 8 m
12000 - 12 m

* Lengths 4 m and 8 m in stock. For other lengths longer lead time may apply.

Readhead compatibility

C - DHR (Artos readhead)

Output connector type

A - 9-pin D-type plug
F - Flying leads
W - M12 male overmould/metal housed connector **

** Subject to availability, may be supplied with overmould or metal housing connector version.

Special requirements

00 - No special requirements

Table of available combinations (Extension cables)

Series	Cable length	Readhead compatibility	Output connector type	Special requirements
EC	04000 / 08000 / 12000	C	A / F / W	00

Accessories



USB interface (BISS C bidirectional output)

E201-9B

For use with option DB.



USB interface (SSI output)

E201-9S

For use with option SC.



Extension cable

EC



Installation tool for Artos™ rings

IT

Packaging

Each readhead is individually packaged in an antistatic bag, in accordance with ESD protection measures.

Head office

RLS Merilna tehnika d. o. o.

Poslovna cona Žeje pri Komendi
Pod vrbami 2
SI-1218 Komenda
Slovenia

T +386 1 5272100
E mail@rls.si

www.rls.si

Global support

Visit our **website** to contact your nearest sales representative.

Document issues

Issue	Date	Page	Description
7	17. 11. 2025	General	FlexAB option added
		11	Ultra-high vacuum chapter added
		15	Pause time amended
		17, 18	Self-calibration chapter added
		10, 23, 24	LED off by default feature added
8	8. 12. 2025	23, 24	Table of available combinations amended
9	25. 3. 2026	25	Table of available resolutions amended
		General	Document structure updated
10	26. 8. 2026	22, 24, 26	Cable length amended
11	21. 10. 2026	7	Reference for readhead orientation added

This product is not designed or intended for use outside the environmental limitations and operating parameters expressly stated on the product's data sheet. Products are not designed or intended for use in medical, military, aerospace, automotive or oil & gas applications or any safety-critical applications where a failure of the product could cause severe environmental or property damage, personal injury or death. Any use in such applications must be specifically agreed to by seller in writing, and is subject to such additional terms as the seller may impose in its sole discretion. Use of products in such applications is at buyer's own risk, and buyer will indemnify and hold harmless seller and its affiliates against any liability, loss, damage or expense arising from such use. Information contained in this data sheet was derived from product testing under controlled laboratory conditions and data reported thereon is subject to the stated tolerances and variations, or if none are stated, then to tolerances and variations consistent with usual trade practices and testing methods. The product's performance outside of laboratory conditions, including when one or more operating parameters is at its maximum range, may not conform to the product's data sheet. Further, information in the product's data sheet does not reflect the performance of the product in any application, end-use or operating environment buyer or its customer may put the product to. Seller and its affiliates make no recommendation, warranty or representation as to the suitability of the product for buyer's application, use, end-product, process or combination with any other product or as to any results buyer or its customer might obtain in their use of the product. Buyer should use its own knowledge, judgment, expertise and testing in selecting the product for buyer's application, end-use and/or operating environment, and should not rely on any oral or written statement, representation, or samples made by seller or its affiliates for any purpose. EXCEPT FOR THE WARRANTIES EXPRESSLY SET FORTH IN THE SELLER'S TERMS AND CONDITIONS OF SALE, SELLER MAKES NO WARRANTY EXPRESS OR IMPLIED WITH RESPECT TO THE PRODUCT, INCLUDING ANY WARRANTY OF MERCHANTABILITY OR FITNESS FOR ANY PARTICULAR PURPOSE, WHICH ARE DISCLAIMED AND EXCLUDED. All sales are subject to seller's exclusive terms and conditions of sale which, where the seller is (a) RLS Merilna tehnika d. o. o., are available at www.rls.si/customer-service, (b) Renishaw, Inc., are available at www.renishaw.com/Shop/legal/en/--42186, or (c) another person, are available on request, and in each case, are incorporated herein by reference, and are the exclusive terms of sale. No other terms and conditions apply. Buyer is not authorized to make any statements or representations that expand upon or extend the environmental limitations and operating parameters of the products, or which imply permitted usage outside of that expressly stated on the data sheet or agreed to in writing by seller.

RLS Merilna tehnika d. o. o. has made considerable effort to ensure the content of this document is correct at the date of publication but makes no warranties or representations regarding the content. RLS Merilna tehnika d. o. o. excludes liability, howsoever arising, for any inaccuracies in this document. © 2026 RLS d. o. o.