Artos™

Board Level Rotary and Linear Absolute Magnetic Encoder System

TRUE ABSOLUTE SYSTEM

PARALLEL OUTPUTS ABSOLUTE + ABZ

HIGH SPEED AND RESOLUTION

Artos™ is an absolute magnetic encoder system designed for motion control applications as a feedback element for angle and velocity control loops.
A highly reliable measurement principle and processing ensure low position latency, high resolution and high angular velocity. The compact PCB-A design and low weight of the encoder system make it suitable for applications with limited space in relatively clean environments.

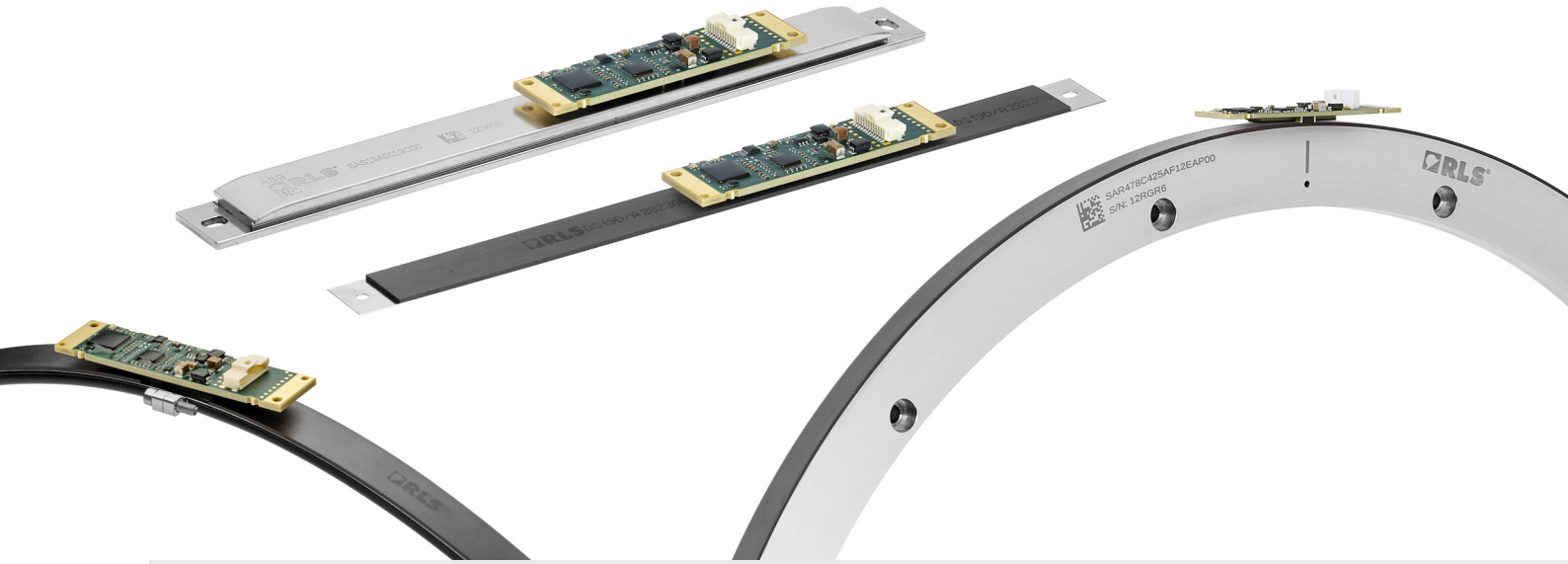

Features and benefits

- True absolute system
- High accuracy and resolution
- Suitable for highly dynamic control loops
- SSI and BiSS C bidirectional communicational protocols + parallel ABZ channel
- Speeds up to 30,000 rpm for rotary and 20 m/s for linear applications
- Compatible with rings, linear/partial arc scales and FlexAB™
- Wide installation tolerances
- Compact design with horizontal or vertical connector

SMT PICK AND PLACE | GIMBALS | LINEAR MOTOR | MEDICAL | ASSEMBLY LINES

General information

Artos™ magnetic encoder system provides true absolute position information immediately after power-on via selected communication protocols. The encoder system offers wide installation tolerances, and with a sealed readhead and ring or scale, ensures robustness and high reliability.

Depending on the application, the encoder system can be used for rotary or linear position measurement. The Artos readhead operates with solid radial rings (SAR), solid linear scales (SAS), flexible scales (DS), and the 360° scale system FlexAB.

The elasto-ferrite layer on the ring or scale is magnetised with both incremental and absolute patterns in a pseudorandom binary sequence (PRBS). This magnetic pattern is read by RLS proprietary sensing technology inside the Artos readhead. The integrated setup LED on the readhead helps the operator in verifying correct installation, and the self-calibration function compensates for eccentricity error after installation.

SAR solid radial rings are designed for rotary applications and are available in exposed and protected versions. In the exposed version, the elasto-ferrite layer is visible. This version is suitable for environments where aggressive liquids are not present. The exposed ring withstands dust, moisture and dirt, but is not intended for applications involving oils, coolants or chemically aggressive substances.

In the protected version, a stainless-steel cover foil is applied over the elasto-ferrite layer to increase mechanical and chemical resistance. The cover foil can be applied in two ways. In the first variant, the foil is wrapped around the circumference of the ring, while the elasto-ferrite layer remains visible from the sides. This configuration protects the sensitive magnetic layer from centrifugal forces and is suitable for high rotational speeds. In the second variant, the foil is applied and welded around the entire circumference of the ring. This fully sealed version provides IP67 protection and withstands significantly higher rotational speeds. It is intended for demanding applications, such as machine tools, where exposure to oils, coolants, greases, non-ferrous particles and high rotational speeds is expected. Magnetic rings are available in outer diameters from 57 mm to 478 mm.

SAS is a solid linear scale intended for high-accuracy linear applications. It is available in exposed and fully welded versions and provides accuracy up to ±6 µm/m. The same IP protection concept applies to SAS scales as to SAR rings. Exposed versions are suitable for dust, moisture and general industrial conditions. Fully welded versions provide increased resistance to liquids, contaminants (IP67 rated) and mechanical stress and are intended for harsh industrial environments.

The readhead is also compatible with a flexible absolute scale **DS** which is available in lengths up to 32 m. The flexible scale is suitable for linear and partial arc applications from a minimum diameter of 200 mm but does not support full 360° rotation.
For applications requiring full 360° absolute measurement on shafts larger than 500 mm, the readhead can be used with the **FlexAB™** scale system. FlexAB incorporates a special joining mechanism that enables continuous 360° rotation measurement.

The compact PCB-A design and low overall system weight make it particularly suitable for integration into space-constrained equipment operating in relatively clean environments. It provides the same true-absolute measurement principle while offering greater flexibility for OEM system integration.

For detailed mechanical specifications, accuracy data and installation requirements of compatible products, refer to:

- **SARD01** – SAR radial rings
- **ASD01** – DS19 and SAS19 scales
- **FAD01** – FlexAB system

All documents are available in the **RLS Media center**.

Choose your Artos system

The PCB readhead is compatible with solid rings, solid scales, the flexible linear or partial arc scales DS19 and FlexAB system. The SAS19 scale, offered in exposed and welded (IP67-rated) versions, provides higher accuracy of ±6 µm/m.

Exposed SAR radial ring



SAR ring with cover foil



SAR ring with welded cover foil



Artos™ PCB-A readhead

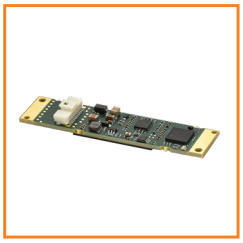

+

Partial arc scale DS19



Linear scale DS19



SAS19 exposed scale

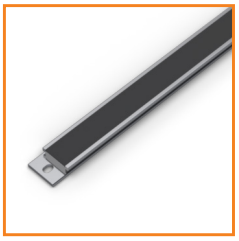

SAS19 fully welded scale



FlexAB magnetic scale system



For detailed mechanical specifications, accuracy data and installation requirements of compatible products, refer to:

- **SARD01** – SAR radial rings
- **ASD01** – DS19 and SAS19 scales
- **FAD01** – FlexAB system

All documents are available in the **RLS Media center**.

Storage and handling

Storage temperature

–40 °C to +85 °C

Operating temperature

–40 °C to +85 °C

Humidity

Up to 70 % non-condensing

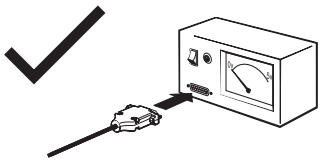

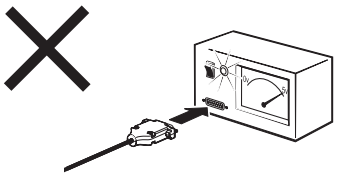

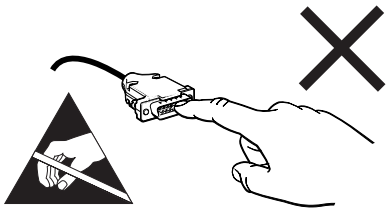

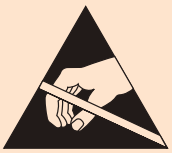

Readhead is ESD sensitive - handle with care.
Do not touch electronic circuit, wires or sensor area without proper ESD protection or outside of ESD controlled environment.

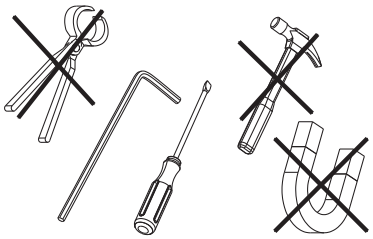

The PCB-A readhead is a mechanically sensitive component. Hold it by the edges, touch it only lightly, minimize pressure and avoid bending it while holding it securely to prevent it from falling. Ensure maximum cleanliness. When not in use, place it in ESD protective packaging (box or tray).

Environmental and operational conditions

External magnetic field

The magnetic encoder system is sensitive to external magnetic fields. The extent to which the magnetic encoder system is affected depends on the magnitude and direction of the external magnetic field. In particular, the rapidly changing stray magnetic fields affect the system and can change its function. Field strengths greater of 1 mT can cause the system to malfunction, resulting in the readhead reporting an invalid position despite inactive error and warning bits in the detailed status and a green LED.

Magnetic field strengths of more than 25 mT cause irreversible damage to the magnetic ring or scale and must be replaced.

Operation in ultra-high-vacuum applications

Artos encoders were tested for outgassing under ultra-high vacuum conditions (UHV, below 1 × 10-6 Pa) for 24 hours at a maximum operating temperature of 85° C. No prior preparation of the encoders was applied. No critical outgassing was detected during the test. The maximum observed relative mass loss (RML) was 0.02 %. The ultra-high vacuum test had no effect on the performance of the Artos encoders.

Readhead markings

The engraving on the PCB-A readhead contains a QR code with a serial number.

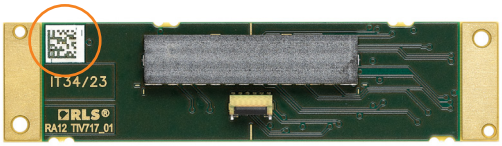

Dimension drawings

Dimensions and tolerances are in mm. Dimensions without tolerance values are in accordance with ISO 2768-m.

Board with vertical connector

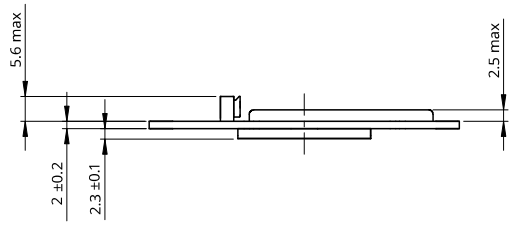

Board with horizontal connector

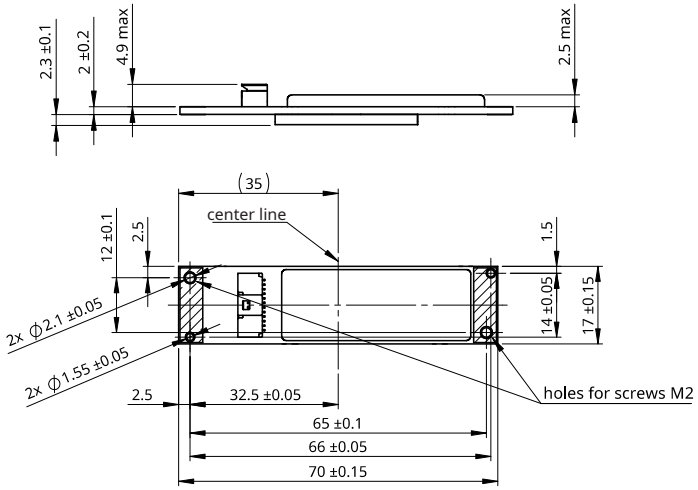

General tolerances for linear dimensions according to ISO 2768-m			
Tolerance class	up to 6	6-30	30-120
m (medium)	±0.1	±0.2	±0.3

Top side

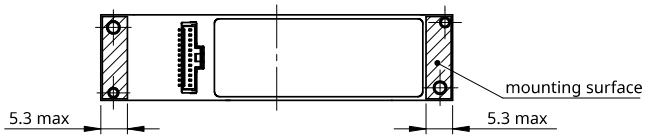

Bottom side

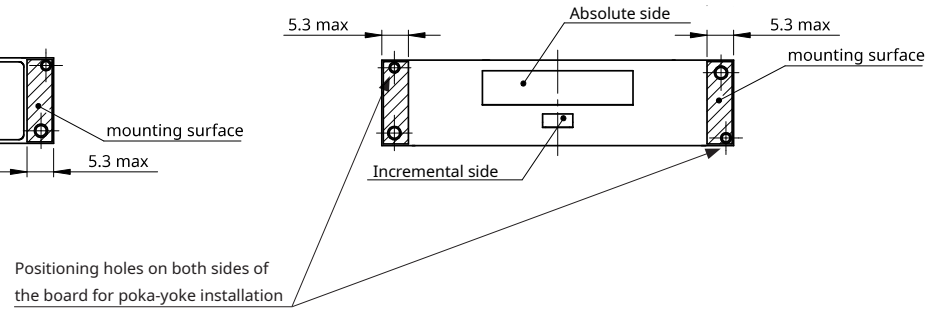

3D model available for download at **RLS website**.

For detailed mechanical specifications, accuracy data and installation requirements of compatible products, refer to:

- **SARD01** – SAR radial rings
- **ASD01** – DS19 and SAS19 scales
- **FAD01** – FlexAB system

All documents are available in the **RLS Media center**.

Installation instructions

The readhead can be installed in 2 different ways - from below or from above. Carefully plan the orientation of the readhead and the ring/magnetic scale. The engraving on the ring and the imprint on the scale can be used to determine the orientation. For details on readhead orientation relative to the magnetic ring or scale, refer to the **SARD01**, **ASD01** and **FAD01** data sheets.

M3 fasteners with washers are recommended. Tightening torques must comply with the **Table of recommended fastener tightening torques**.

After mounting the magnetic ring or scale, position the readhead to achieve the specified ride height. The permissible ride height and installation tolerances are defined in data sheets **SARD01**, **ASD01** and **FAD01**.

A dedicated installation tool is recommended to ensure correct alignment of the readhead. If such a tool is not available, a non-magnetic plastic shim may be used to set the ride height. The shim controls the ride height only and does not ensure alignment in tangential, axial, yaw, pitch or roll directions. Mechanical alignment of the readhead must therefore be verified before final tightening.

Before tightening the mounting screws, ensure that the readhead, shim and magnetic ring or scale are fully aligned. After tightening the screws, the shim may be removed.

During installation, rotate the ring or scale and verify that the LED illuminates green at all measuring positions. If the LED does not indicate green status, the installation must be checked and corrected. Further information is provided in the chapter **Status indicator LED**.

Improper mounting of the ring or scale and the readhead can impair the performance or function of the magnetic encoder system and lead to total failure.

Installation from above

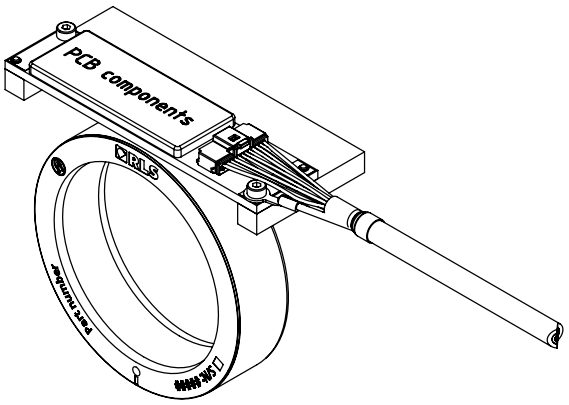

Installation from below

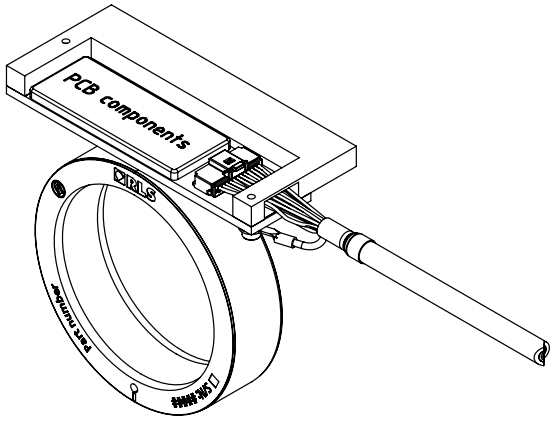

To avoid damaging the PCB, do not use countersunk fasteners.

Ensure metal surfaces are anodized and maintain a minimum distance of 0.5 mm from sensitive components.

The magnetic encoder system must be used in accordance with the specified degree of protection. The following factors must be taken into account: IP protection class, operating temperature, external magnetic field, mechanical load and EMC compatibility.

Installation with ACC079 brackets

Installation with magnetic scale

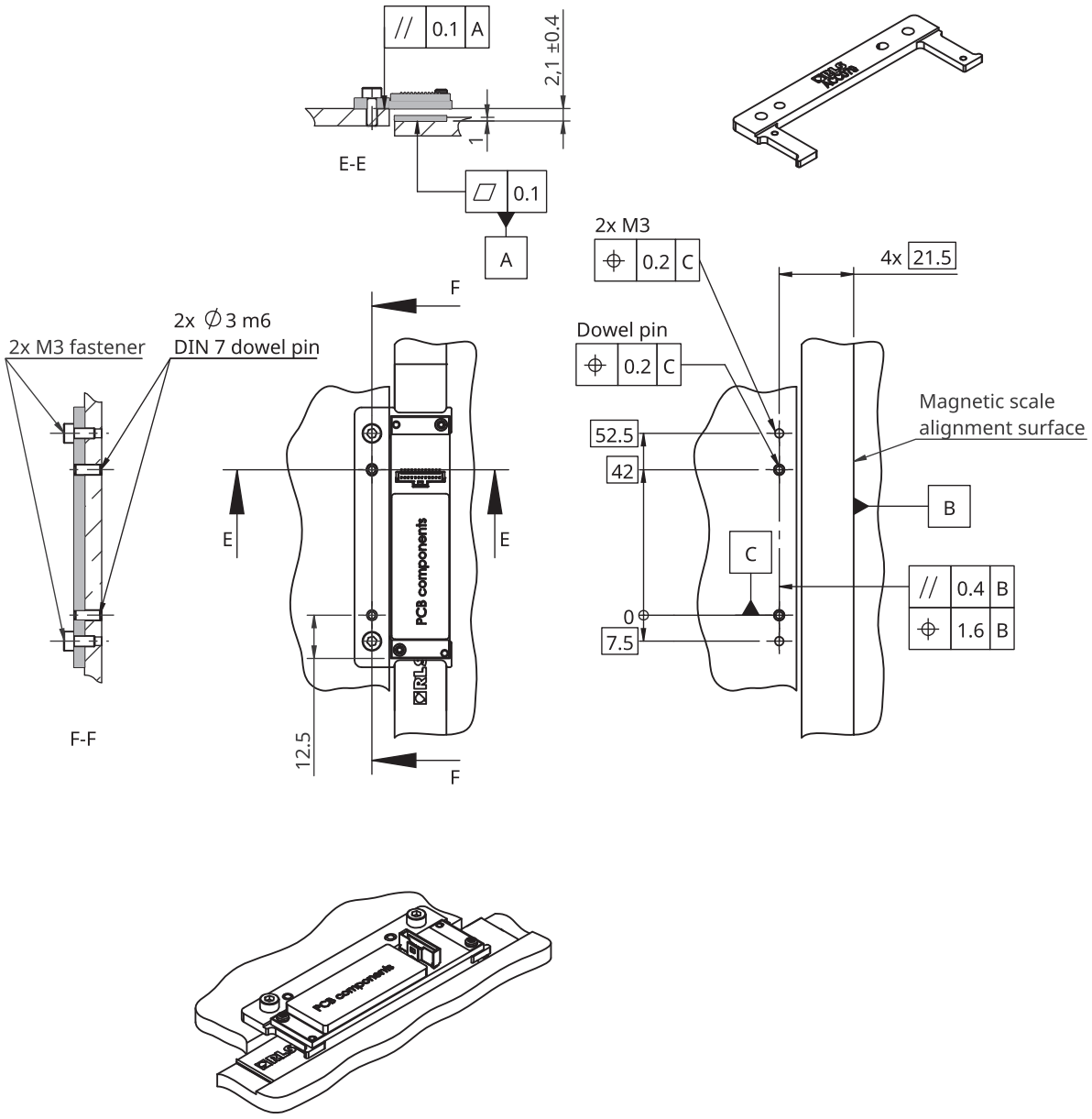

Installation with magnetic ring

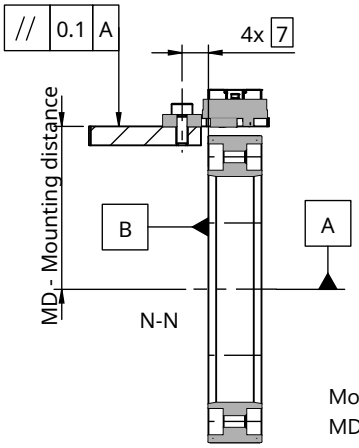

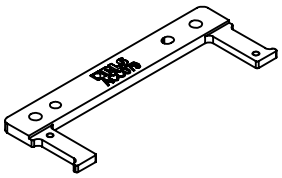

Mounting distance
MD = Ring OD/2 + Ride height (RH)+0,1

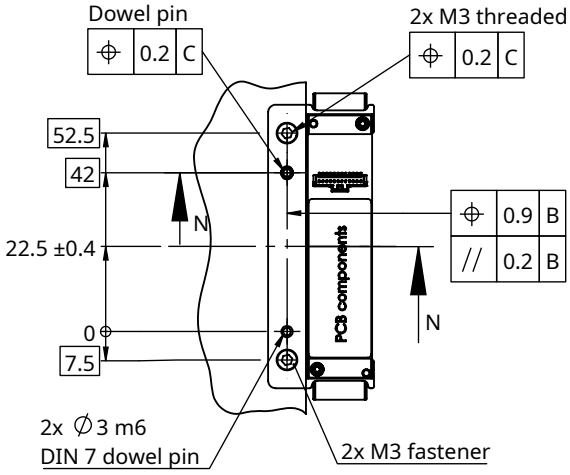

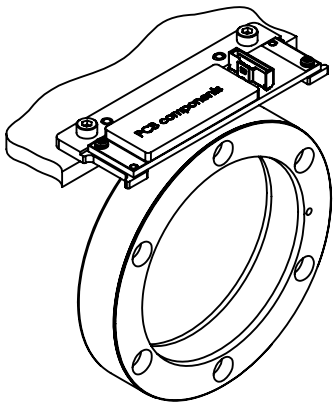

Installation with ACC080 brackets

Installation with magnetic scale

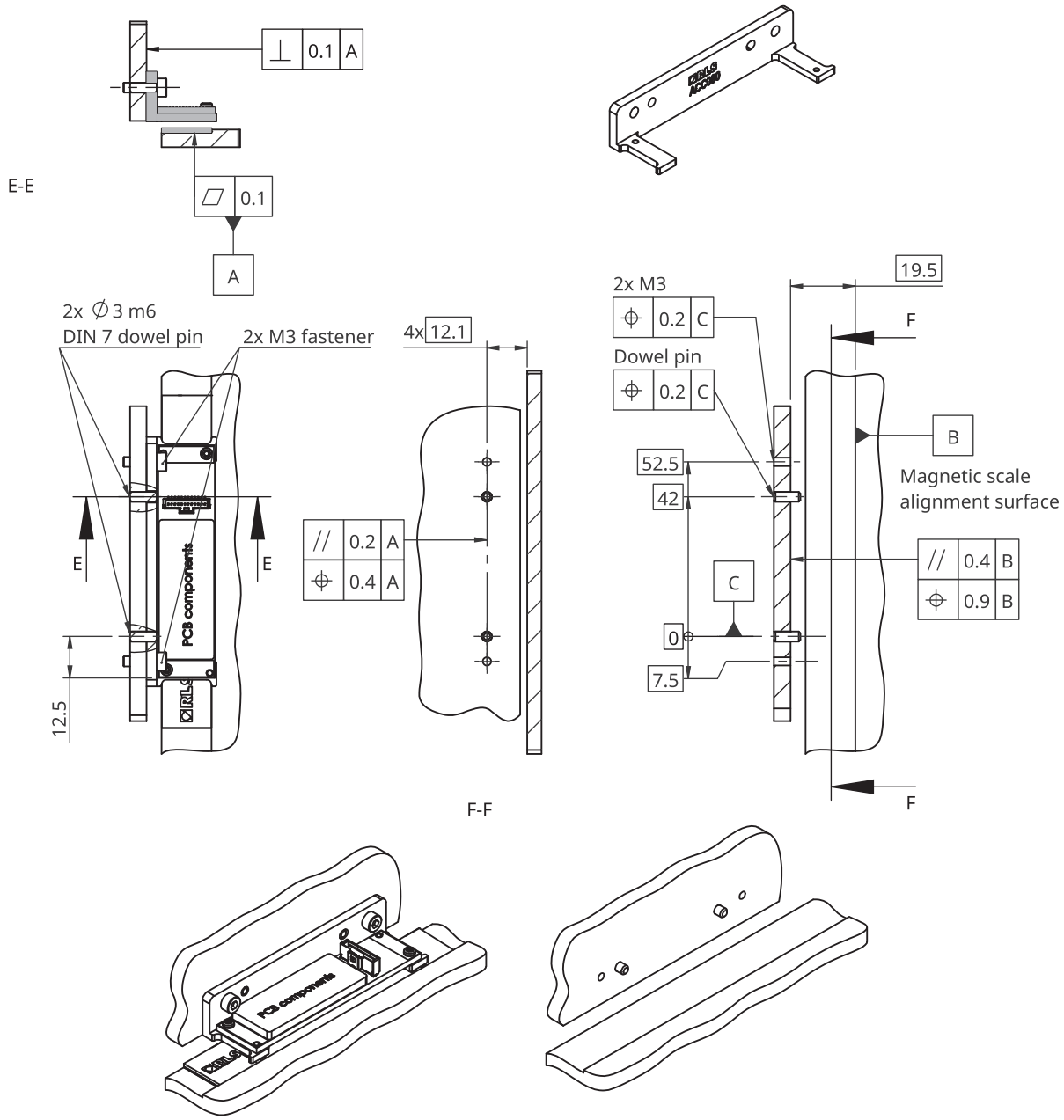

Installation with magnetic ring

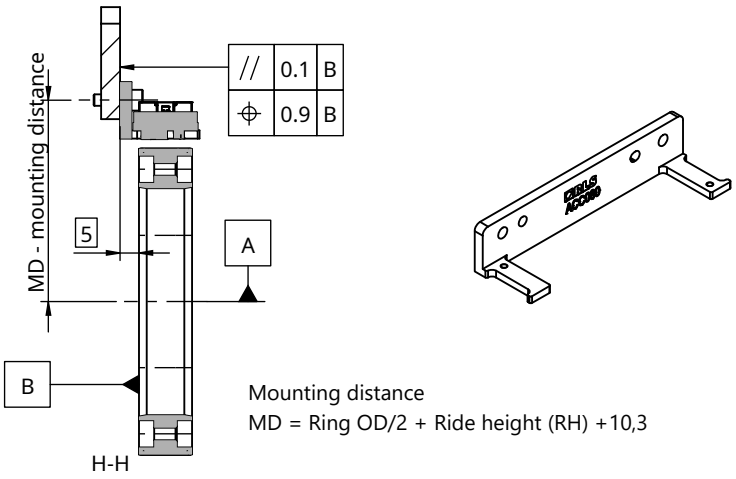

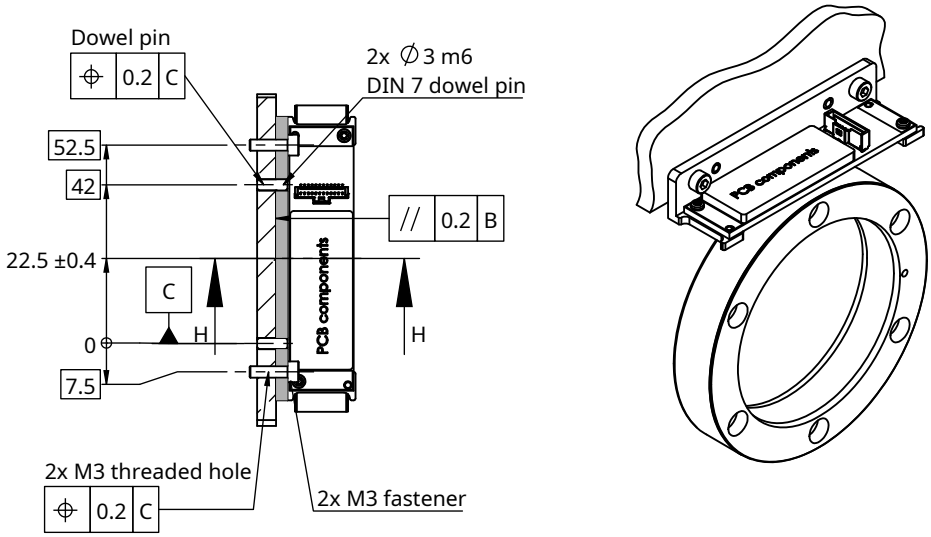

Self-calibration

Installation-induced eccentricity compensation on SAR magnetic rings

The self-calibration function compensates errors caused by eccentricity, which is a primary contributor to encoder inaccuracy resulting from eccentric ring mounting. However, it does not correct magnetisation errors between different rings. This function reduces the error of one sine wave per revolution and can be initiated by the user via the BiSS C bidirectional communication interface or through the E201-9B USB encoder interface. The self-calibration feature is not available with SSI output.

Requirements:

- A mechanical rotation of the SAR ring by 360°. The rotation can be clockwise or counterclockwise.
- Error and warning-free reading over the entire revolution of the ring (CW and CCW).
- Default time available is 10 seconds. The desired time (up to 40 seconds) can be set via the BiSS C communication interface.
- Maximum speed is 30 rpm.
- Operating temperature inside the specified range (–40 to +85°C).
- Suitable communication interface (BiSS C) or adapter that enables the function to be triggered (E201-9B).
- Eccentricity greater than specified in the table below.

The self-calibration method has inherent limitations. It is only effective if the installation-related eccentricity exceeds a certain threshold value for the corresponding ring size. For example, when using the SAR114 ring, if the measured eccentricity at the outer diameter is greater than ±25 µm (peak-to-peak 50 µm), the self-calibration algorithm will take effect and provide a reliable correction of the eccentricity, as shown in the graph on the next page. In general, the greater the initial eccentricity, the more effectively the self-calibration can compensate for it. However, the eccentricity induced during installation must not exceed the maximum permissible ride height (air gap) specified in **SARD01** available at **RLS Media center**. The readhead must work without errors or warnings when moving clockwise and counterclockwise movement over 360°.

Eccentricity correction limit	
SAR057	±15 µm
SAR080	±20 µm
SAR114	±25 µm
SAR162	±30 µm
SAR229	±35 µm
SAR325	±40 µm
SAR478	±50 µm

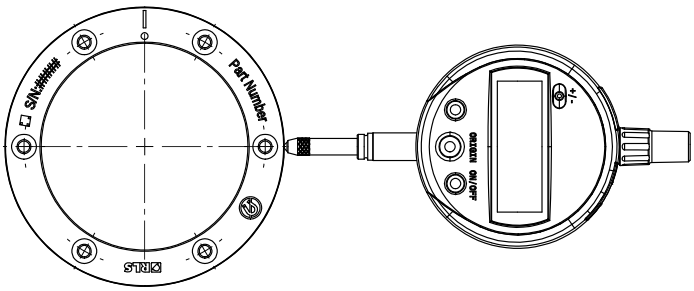

Figure shows measurement of the actual radial runout after installation.

The self-calibration method significantly reduces the effects of eccentricity. The graph below illustrates the system accuracy before and after calibration. In this example, the eccentricity value is approximately ±35 µm.

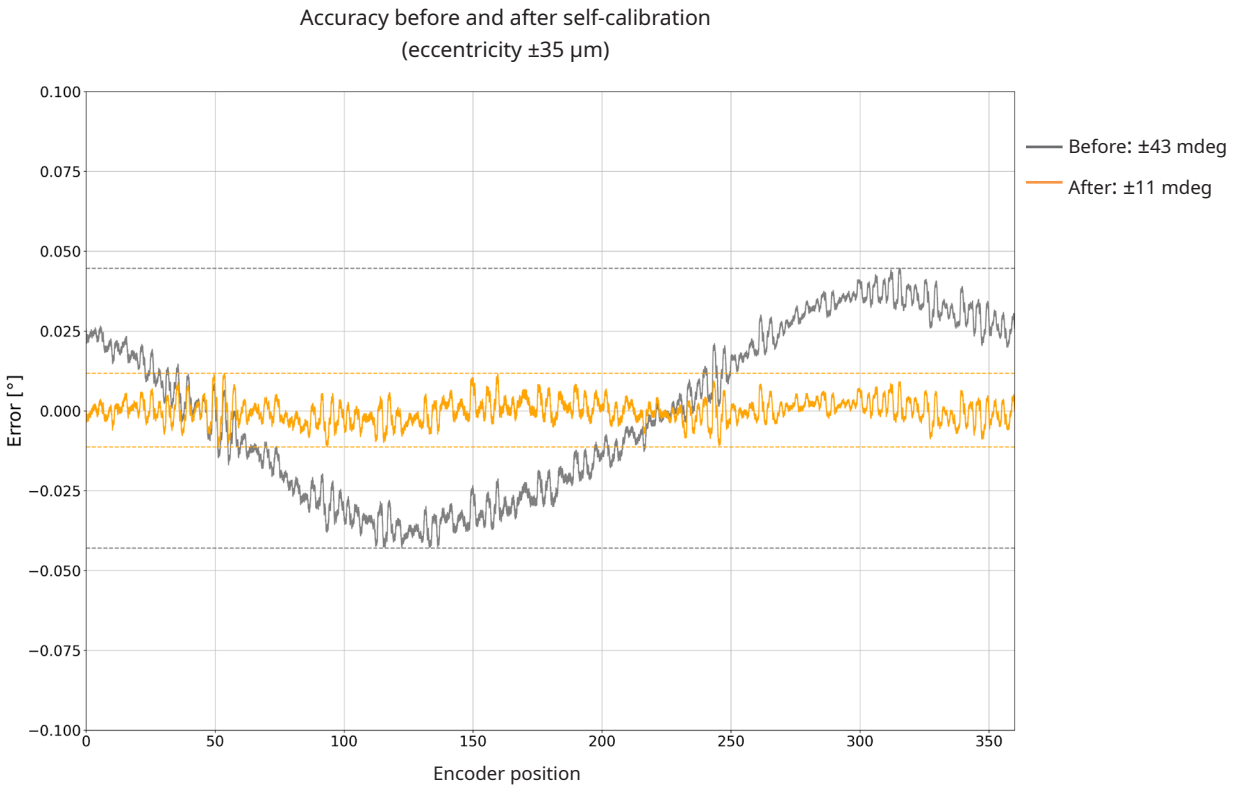

For details on Artos BiSS C bidirectional register access and other funcitonalities please refer to the application note **APP07** available at **RLS media center.**

Technical specifications

System specifications

Type of absolute measurement	Pseudo-random binary sequence (PRBS) absolute code; RLS proprietary sensor technology
Reading type	Radial
Hysteresis	<3.5 µm at nominal ride height SAR057 = 25 arcsec SAR081 = 18 arcsec SAR114 = 13 arcsec SAR162 = 9 arcsec SAR229 = 6 arcsec SAR325 = 4 arcsec SAR478 = 3 arcsec
Accuracy	Refer to **SARD01**, **ASD01** and **FAD01 data sheets**
Unidirectional repeatability	<1.5 µm
Resolution	Rings: up to 23 bits binary resolution (depends on the ring size) Magnetic scales: up to ~0.100 µm See **Table of available resolutions.**
Sensor and processing latency	<1 µs
Internal loop refresh rate	91 kHz
Maximum speed during power up	Rotary: 500 rpm Linear: 10 m/s

Electrical data

Power supply	From 4.75 V to 30 V (voltage on readhead, consider voltage drop over cable)
Reverse polarity protection	Yes
Set-up time after switch-on	<200 ms
Power consumption (without load)	0.7 W
Communication standard	Differential line driver signal (RS422)
Output load	±40 mA
ESD protection	HBM, max. ±2 kV
Maximum cable length	10 m

Mechanical data

Mass	9 g
Conformal coating (optional)	AB chimie 746 E UV LED (low viscosity)
Connector type	Vertical: MOLEX 501331-1207
	Horizontal: MOLEX 501568-1207
Possible connector mating part	Receptacle Housing: Molex 501330-1200 Female Crimp Terminals: 501193-7000 501193-8000 501193-9000 501334-0000

Environmental data

Operating and storage temperature	–40 °C to +85 °C
Vibrations (55 Hz to 2000 Hz)	30 g m/s2 (IEC 60068-2-6)
Shocks (11 ms)	100 g (IEC 60068-2-27)
Humidity	70 % (non-condensing)
ESD protection	HBM, Class 2, ±2 kV (valid only on RS422 signals on connector; do not touch other components)
Maximum external magnetic field during operation	1 mT

Electrical connections

Vertical connector

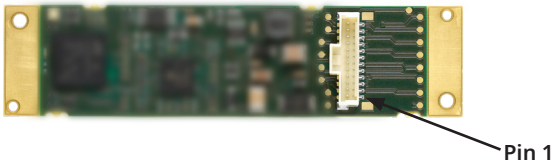

Horizontal connector

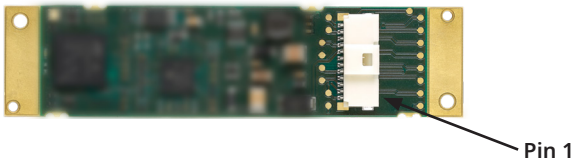

Function	Pin	Signal (BiSS C / SSI) + ABZ
Incremental output (AB channel)	1	Z–
	2	Z+
	3	B–
	4	B+
	5	A–
	6	A+
Power supply	7	GND
	8	Vin
Serial communication (Absolute output)	9	SLO– (data)
	10	SLO+ (data)
	11	MA– (clock)
	12	MA+ (clock)

If conformal coating is applied, the output connector is not protected by the coating.

System integration / Shield connection

The mounting surfaces of the PCB are not connected to signal ground. To achieve EMC compliance, the encoder system must be correctly integrated. Particular attention must be paid to the shielding arrangements. The mounting surfaces of the encoder and the cable shield must be connected to chasis with a good and reliable connection. Preferably, the cable shield is crimped on a ring terminal, which is bolted through one of the mounting holes of the encoder. Special care must be taken to ensure that the cable shield only touches the gold mounting surface. See the **Installation instructions.**

Status indicator LED

Once the ring or magnetic scale has been installed, the readhead can be easily mounted on the machine using the **LED setup indicator**. The LED indicator shows the internal status of the encoder and is used to facilitate the installation and diagnosis of the encoder system. According to the table **Detailed status description**, certain errors are latched, resulting in LED indicating error status persistently. To clear latched error statuses, communication with readhead or readhead power cycle is required.

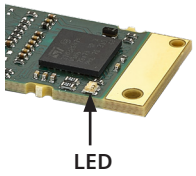

Slow flashing of LED indicates that the encoder is receiving power, but communication between the encoder and the controller has not yet been established. The error status has a higher priority than the warning status in the LED signaling. The signaling of LED may differ from the encoder status signaled by the controller. In case of error or warning the LED remains red or orange for at least 200 ms.

LED Status		Status	Description
●	**Green**	Normal operation	Position data is valid.
●	**Orange**	Warning	• The internal temperature is near operational limits. • The encoder system is near operational limits. For details please check possible causes under the Error status.
●	**Red**	Error	Position data is not valid. Possible causes: • The distance between the readhead and the magnetic scale is too large. • The readhead is out of alignment with the ring or magnetic scale or they are demagnetised. • Incorrect orientation of the readhead and ring or magnetic scale. • The encoder speed is out of operational limits.
●●●●●	**Fast red flashing**	Error	Position data is not valid. Internal system error.
● ●●	**Irregular flashing**	/	Power supply too low.
●●● ●●● ●●●	**Slow red, green or orange flashing**	/	The communication has not been established.
●●● 3 s ●●● 3 s ●●● 3 s	**3 sec. fast flashing**	/	Self-calibration result - see chapter **Self calibration.**
○	**No light**	/	No power supply.

The LED signal statuses listed in the table above do not indicate non-optimal installation of the readhead, e. g. an accuracy outside the specified range.

During installation it is advised that the ring or scale reciprocate over the entire range of motion to observe the encoder status on the LED (max speed is 5 rpm for rotary or 50 mm/s for linear appliations). As soon as the LED indicator remains green over the entire range of motion, this indicates that the encoder is correctly installed.

LED can be switched OFF, defined by the part-number. Only available for BiSS C bidirectional protocol.

Troubleshooting

If the readhead reports an error during operation due to incorrect decoding of the absolute position on the magnetic ring/scale, this indicates a serious problem. Serious problems include incorrect installation or a damaged magnetic pattern on the ring or scale. To determine the cause of the problem, please proceed as follows:

- Make sure that the part number on the readhead and the ring or scale match the required combination. The valid combination of ring and readhead can be verified with the first 6 letters of the part number.
- Verify that the installation matches the specification of the encoder for the orientation of the readhead relative to the ring/scale (ride height/radial offset, lateral/axial offset, centerline/ tangential, roll, pitch and yaw offsets).
- If possible, check the error location on the magnetic ring/scale with the magnetic viewer for an abnormal pattern in the magnetic code.
- Check the power supply. This is especially important for longer cable lengths. Take into account the voltage drop over the cable.
- Refer to **Maximum speed calculator for rings** or **Maximum speed calculator for scales** to ensure that the required rotational/linear speed matches the selected parameters of the readhead (resolution and minimum edge separation values) and ring dimension. This is important if the ABZ channel is enabled in parallel to the BiSS/SSI absolute channel.

BiSS C bidirectional communication interface

The absolute position data and the status are available via the BiSS C bidirectional protocol. The length of the position data varies depending on the combination of SAR ring, linear/partial arc, or FlexAB scale and selected resolution. In combination with the SAR ring, the length of the position data is up to 23 bits. In combination with the scale or FlexAB, the length of the position data is up to 29 bits. The position data is always right-aligned, MSB first and without padding bits on the LSB. The absolute position is followed by 2 general status bits, which are active low (error and warning) and 6 bits CRC (inverted).

BiSS is implemented for point-to-point operation, multiple slaves are not supported. The readhead supports bidirectional communication. Additional data can be read from the encoder, as well as sending different commands such as zeroing, triggering self-calibration, etc.).

Electrical connection

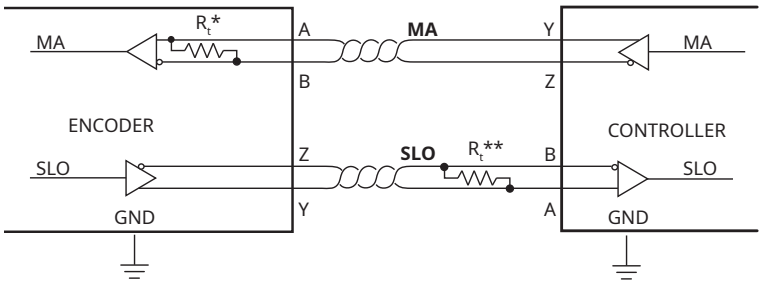

Signals	
MA	Master clock.
SLO	Slave out. Data is output on rising edge on MA.

* The MA and SLO lines are 5 V RS422 compatible differential pairs. The termination resistor on the MA line is integrated inside the encoder.

** Termination at the controller is required, if total cable length is longer than 5 m. The nominal impedance of the cable is 120 Ω.

BiSS C timing diagram

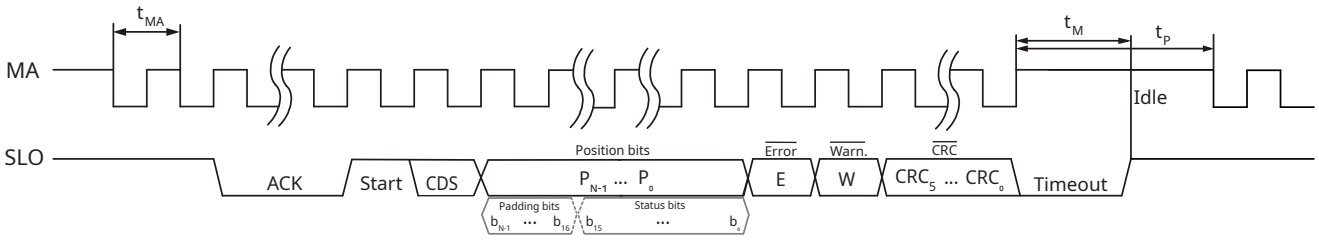

N = number of position bits

In case of an error, the position data field is replaced by the detailed status described on **page 21.** The detailed status is 16 bits long and right-aligned. Other unused bits in the position field become padding bits and are set to zero. The exact length of the position data is determined by the combination of ring/scale and resolution. See **Table of available resolutions**.

BiSS C Parameters

Interface type	BiSS C bidirectional (point-to-point)
Signal level	RS422
Position data encoding	Pure binary
Max MA frequency	5 MHz
Min MA frequency	500 kHz
Length of position data	Depends on the resolution. See **Table of available resolutions.**
Length and type of status data	2 bits (Error, Warning). Active low. Error/warning descriptions, can be found in the **LED table**.
CRC length and type	6 bits (inverted bit output - polynomial 0x43)
ACK length	13 bits
Communication delay	3.2 µs at 5 MHz MA freq.; otherwise 16 MA clock periods
Timeout	≥15 µs or when the SLO line goes high
Data frame rate	Up to 40 kHz

For details on Artos BiSS C bidirectional register access and other funcitonalities please refer to the application note **APP07** available at **RLS media center.**

SSI communication interface

The absolute position data and the status are available via the SSI protocol. The length of the position data varies depending on the combination of SAR magnetic ring, scale, partial arc or FlexAB scale and selected resolution. In combination with the SAR magnetic ring, the length of the position data is up to 23 bits. In combination with the magnetic scale or FlexAB, the length of the position data is up to 29 bits. The position data is always right-aligned, MSB first and without padding bits on the LSB. The absolute position is followed by 2 general status bits, which are active low (error and warning), and 16 bits with detailed status.

Electrical connection

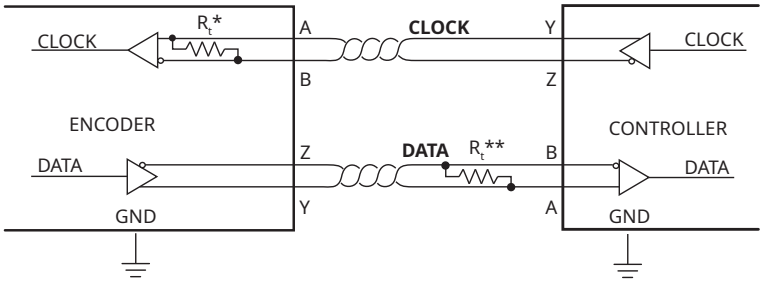

* The CLOCK and DATA lines are 5 V RS422 compatible differential pairs. The termination resistor on the CLOCK line is integrated in the encoder.

** Termination at the controller is required if the total cable length is more than 5 m. The nominal impedance of the cable is 120 Ω.

SSI timing diagram

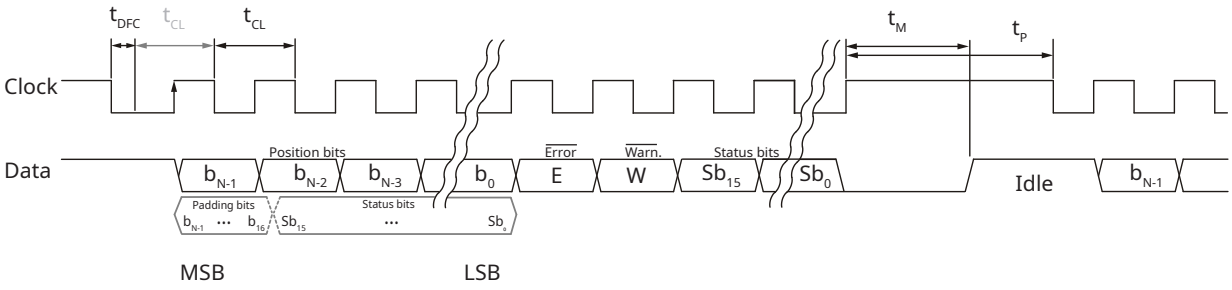

N = number of position bits

The detailed status bits follow the warning bit in the data frame. In case of an error, the position data field is also replaced by the detailed status described on **page 21**. The detailed status is 16 bits long and right-aligned. Other unused bits in the position field become padding bits and are set to zero.
The exact length of the position data is determined by the combination of magnetic ring or scale and resolution. See **Table of available resolutions**.

The controller requests the position and status data of the encoder by sending a pulse train to the Clock input. The Clock signal always starts from high. The first falling edge of the Clock latches the last position data available and on the first rising edge of the Clock the most significant bit (MSB) of the position is transmitted to the Data output. If the time t_{DFC} is extended for additional 2 µs, the maximum clock frequency limit is 2.5 MHz instead of 500 kHz. The Data output should then be read on the following falling edge. On subsequent rising edges of the Clock signal the next bits are transmitted.

After the transmission of the last bit the Data output goes to low. When the t_M time expires, the Data output goes high. The Clock signal must remain high for at least t_P before the next reading can take place.

While reading the data, the half of a Clock period t_{CL} must always be less than t_M. However, reading the encoder position can be terminated at any time by setting the Clock signal to high for the duration of t_M.

SSI Parameters

Interface type	SSI unidirectional (point-to-point)
Signal level	RS422
Position data encoding	Pure binary
Max CLOCK frequency	500 kHz (2.5 MHz with first clock delay function on the controller) - tDFC
Min CLOCK frequency	80 kHz
Length of position data	Depends on the resolution. See **Table of available resolutions.**
Length and type of status data	2 bits (Error, Warning). Active low. Error/warning descriptions, can be found in the **LED table.**
Timeout t_M	≥20 µs or when the DATA line goes high
Max request rate at highest resolution	Up to 25 kHz
Delay first clock t_{DFC}	2 - 10 µs
Pause time t_P	t_M + 2 µs

Detailed status description

BiSS and SSI - detailed status replaces position data while error bit is active.

Bit number	Description of error/warning	Error / Warning	Clearing
b15	Reserved	/	/
b14	Temperature warning. Temperature has exceeded the upper specified limit (85 °C).	Warning	When absent
b13	Signal warning. The signals from the sensor are distorted. The encoder performance (noise, accuracy, ...) may not be as specified. Check if the readhead is installed within specification. The ring/readhead may be damaged.	Warning	When absent
b12	Reserved	/	/
b11	Decoding warning. The amplitude on the absolute sensor is too close to the limit for reliable decoding. Check the installation of the readhead and try to improve it.	Warning	When absent
b10	Overspeed warning. Refer to **Maximum speed calculator for rings** or **Maximum speed calculator for scales.** The rotational/linear speed is too high for the ABZ output to keep up. The ABZ output is now lagging behind the actual position. Continuing with this warning may result in overspeed error. Decrease the rotational/linear speed or use a readhead with different resolution and edge separation setting. This warning is only enabled if ABZ output is enabled.	Warning	When absent
b9	Reserved	/	/
b8	Sensors mismatch error. The positions of the absolute and incremental sensors do not match. This is likely due to a damaged ring/scale or external magnetic fields. It could be a result of using incompatible rings/scales. Check the orientation of the ring/scale relative to the readhead (the engraving sides must match).	Error	On communi-cation

Detailed status continued

Bit number	Description of error/warning	Error / Warning	Clearing
b7	Decoding error. The amplitude on the absolute sensor is too low for reliable decoding. Check the installation of the readhead.	Error	When absent
b6	Signal error. The signals from the sensor are distorted beyond the ability to be reliably interpreted. Check if the readhead is installed within specification. Check the orientation of the ring/scale relative to the readhead (the engraving sides must match). The encoder system may be damaged.	Error	On communication
b5	Reserved	/	/
b4	System error. Malfunction inside the circuitry. To reset the System error bit, try to cycle the power supply while the rise time is shorter than 20 ms. If the error persists, contact RLS.	Error	On reset
b3	Reserved	/	/
b2	Overspeed error. The rotational/linear speed is too high for the interpolator to keep up, or the ABZ output has been lagging too far behind the actual position for the readhead to keep buffering the position. This error is only enabled if ABZ output is enabled. Decrease the rotational or linear speed or use a readhead with different resolution and edge separation setting. Refer to **Maximum speed calculator for rings** or **Maximum speed calculator for scales.**	Error	On communication
b1	Position uninitialized error. The conditions for calculating the valid absolute position have not yet been met. The error should clear on communication. If it persists, this could be due to the following: The readhead mounting is incorrect. The ring/scale is damaged. The ring rotates at more than 500 rpm during the power up sequence or after the readhead is trying to recover from the error. The linear speed is above 10 m/s during the power up sequence or after the readhead is trying to recover from the error. This error always sets in conjunction with other errors (except for decoding error). The error may also be set for a short period of time on first startup. However, it should clear automatically. If it does not, see reasons above.	Error	On communication (except first time after startup)
b0	Reserved	/	/

Output type

Incremental output

Output signals	3 square-wave signals A, B, Z and their inverted signals A–, B–, Z–
Reference signal	1 square pulse Z and its complementary pulse Z– per revolution (aligned with the absolute position zero)*
Signal level	Differential line driver according to EIA standard RS422
Permissible load	$Z_0 \geq 120\ \Omega$ between associated outputs

* Unique Z signal is only present with the rings at absolute zero position. If the zeroing function is used over BiSS C bidirectional protocol, the Z output remains at the original absolute zero position. For details on Artos BiSS C bidirectional register access and other funcitonalities please refer to the application note APP07 available at **RLS media center.**

Timing diagram

Complementary signals not shown

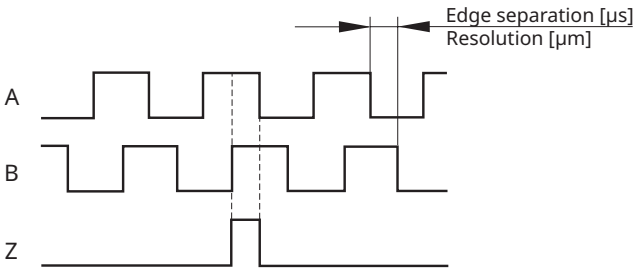

Recommended signal termination

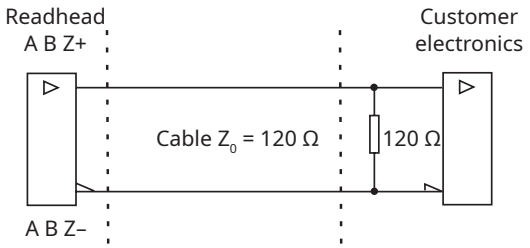

Cable length compensation

The readhead needs 70 ns to respond to incoming clocks (t_{RESP}). The change on the Data signal is delayed by 70 ns after the rising edge on the Clock line. An additional delay is caused by the time the signal takes to propagate through the cable to the readhead and back (t_{PROP}). This delay is typically 14 ns per 1 meter cable. The total cable length from the encoder to the receiver must be considered.

The total delay (t_{DELAY}) is calculated as in the formula below.

A proper implementation of BiSS Master should automatically measure t_{DELAY} and adjust the internal timing to compensate for it.

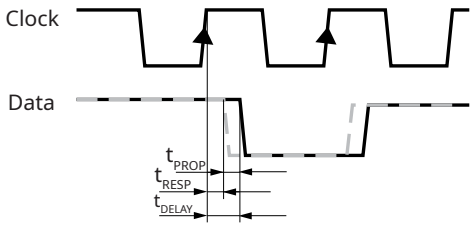

$$t_{DELAY} = t_{RESP} + t_{PROP} \times \text{cable length}$$

Current consumption vs. power supply

Measurement was made on the readhead with a 1 m long cable without termination.

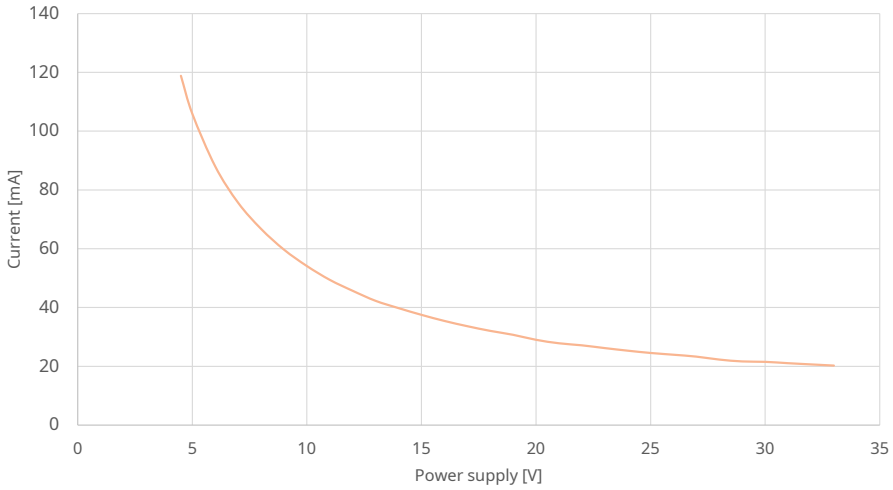

Maximum frequency vs. cable length

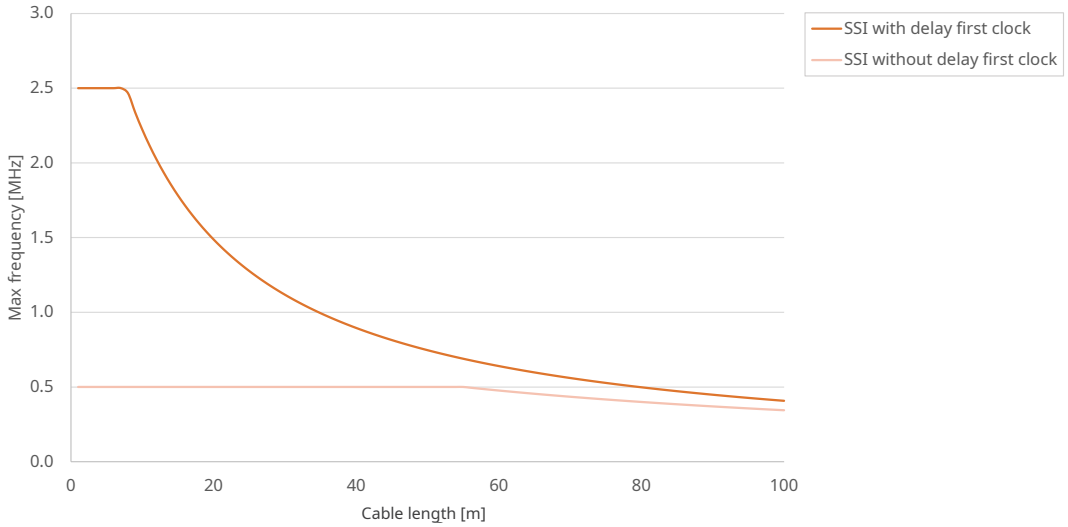

Part numbering

Readhead

DBR 057 DC 23B A A S 000 H 00

Encoder family

DBR - Absolute readhead, PCB-A, for SAR rings
DBL - Absolute readhead, PCB-A, for linear and partial arc scales
DBF - Absolute readhead, PCB-A, for FlexAB type scale

Compatibility

Ring OD

057 - 57 mm
081 - 81 mm
114 - 114.2 mm
162 - 162 mm
229 - 229 mm
325 - 325 mm
478 - 478 mm

FlexAB system

xxx - Refer to the **FlexAB calculator**, to determine the unique value.

Linear and partial arc scale

001 - DS19 (≤ 2 m, minimum bending diameter 200 mm, ±10 µm accuracy)
002 - DS19 (2 ≤ 8 m, minimum bending diameter 630 mm, ±10 µm accuracy)

Linear scale

003 - DS19 (8 ≤ 32 m, no bending allowed, ±15 µm accuracy)
004 - SAS19 (up to 2.46 m, ±6 µm accuracy)

Output type

DB - BiSS C bidirectional output
DL - BiSS C bidirectional + incremental output ABZ
SC - SSI output
SI - SSI + incremental output ABZ

Resolution

For rings (in CPR)

23B - 8,388,608	**18B** - 262,144	**0DB** - 1,024,000	**0IB** - 512,000
22B - 4,194,304	**17B** - 131,072	**0EB** - 737,280	**0JB** - 360,000
21B - 2,097,152	**0AB** - 5,898,240	**0FB** - 368,640	**0KB** - 256,000
20B - 1,048,576	**0BB** - 2,949,120	**0GB** - 184,320	**0LB** - 180,000
19B - 524,288	**0CB** - 1,474,560	**0HB** - 720,000	**0MB** - 1,504,000

With the options DI and SI (ABZ enabled) the maximum resolution on the ABZ channel is 20 bits. If the resolution selected for the particular ring is higher than 20 bits, the ABZ resolution remains at 20 bits.

For linear, partial arc scales and FlexAB

14U - 0.122070313 µm	**10U** - 1.953125 µm	**06U** - 31.25 µm	**8D0** - 0.25 µm	**010** - 10 µm
13U - 0.244140625 µm	**09U** - 3.90625 µm	**05U** - 62.5 µm	**001** - 1.0 µm	**10D** - 0.1 µm
12U - 0.48828125 µm	**08U** - 7.8125 µm	**04U** - 125 µm	**002** - 2 µm	**20D** - 0.2 µm
11U - 0.9765625 µm	**07U** - 15.625 µm	**4D0** - 0.5 µm	**005** - 5 µm	

Minimum edge separation

A - 0.02 µs / 50 MHz	**D** - 0.14 µs / 7.14 MHz	**G** - 1 µs / 1 MHz
B - 0.04 µs / 25 MHz	**E** - 0.26 µs / 3.85 MHz	**H** - 2 µs / 0.5 MHz
C - 0.08 µs / 12.5 MHz	**F** - 0.50 µs / 2 MHz	**I** - 4 µs / 0.25 MHz

Connector type

H - Horizontal connector
V - Vertical connector

Special requirements

00 - No special requirements
01 - Conformal coating
02 - LED off by default (only for BiSS C output)
03 - LED off by default + conformal coating (only for BiSS C output)

Not all part number combinations are valid. Refer to the table of available combinations on the following pages.

Table of available resolutions (DBR readhead with SAR rings)

Readhead	Outer diameter	Pole number	Compatible resolutions CPR (bits)	Position data length	Resolution part number
DBR	057	90	1,474,560	21	0CB
			737,280	20	0EB
			368,640	19	0FB
			184,320	18	0GB
			180,000	18	0LB
			1,048,576 (20)	20	20B
			524,288 (19)	19	19B
			262,144 (18)	18	18B
			131,072 (17)	17	17B
	081	128	2,097,152 (21)	21	21B
			1,048,576 (20)	20	20B
			524,288 (19)	19	19B
			262,144 (18)	18	18B
			256,000	18	0KB
	114	180	2,949,120	22	0BB
			1,474,560	21	0CB
			737,280	20	0EB
			368,640	19	0FB
			360,000	19	0JB
			2,097,152 (21)	21	21B
			1,048,576 (20)	20	20B
			524,288 (19)	19	19B
			262,144 (18)	18	18B
	162	256	4,194,304 (22)	22	22B
			2,097,152 (21)	21	21B
			1,048,576 (20)	20	20B
			524,288 (19)	19	19B
			512,000	19	0IB
	229	360	5,898,240	23	0AB
			2,949,120	22	0BB
			1,474,560	21	0CB
			737,280	20	0EB
			720,000	20	0HB
			4,194,304 (22)	22	22B
			2,097,152 (21)	21	21B
			1,048,576 (20)	20	20B
			524,288 (19)	19	19B
	325	512	8,388,608 (23)	23	23B
			4,194,304 (22)	22	22B
			2,097,152 (21)	21	21B
			1,048,576 (20)	20	20B
			1,024,000	20	0DB
	478	752	8,388,608 (23)	23	23B
			4,194,304 (22)	22	22B
			2,097,152 (21)	21	21B
			1,048,576 (20)	20	20B
			1,504,000	21	0MB

Further information can be found in the **SARD01** data sheet.

Table of available combinations (DBR readhead with SAR rings)

Series	Outer diameter	Output type	Resolution	N/A	Minimum edge separation	N/A	N/A	Connector type	Special requirements
DBR	057	DB	17B / 18B / 19B / 20B / 0LB / 0GB / 0FB / 0EB / 0CB	A	A	S	000	H / V	00 / 01 / 02 / 03
	081		18B / 19B / 20B / 21B / 0KB						
	114		18B / 19B / 20B / 21B / 0JB / 0FB / 0EB / 0CB / 0BB						
	162		19B / 20B / 21B / 22B / 0IB						
	229		19B / 20B / 21B / 22B / 0HB / 0EB / 0CB / 0BB / 0AB						
	325		20B / 21B / 22B / 23B / 0DB						
	478		23B / 22B / 21B / 20B / 0MB						
	057	DL	17B / 18B / 19B / 20B / 0LB / 0GB / 0FB / 0EB / 0CB		A / B / C / D / E / F / G / H / I				
	081		18B / 19B / 20B / 21B / 0KB						
	114		18B / 19B / 20B / 21B / 0JB / 0FB / 0EB / 0CB / 0BB						
	162		19B / 20B / 21B / 22B / 0IB						
	229		19B / 20B / 21B / 22B / 0HB / 0EB / 0CB / 0BB / 0AB						
	325		20B / 21B / 22B / 23B / 0DB						
	478		23B / 22B / 21B / 20B / 0MB						
	057	SC	17B / 18B / 19B / 20B / 0LB / 0GB / 0FB / 0EB / 0CB		A				00 / 01
	081		18B / 19B / 20B / 21B / 0KB						
	114		18B / 19B / 20B / 21B / 0JB / 0FB / 0EB / 0CB / 0BB						
	162		19B / 20B / 21B / 22B / 0IB						
	229		19B / 20B / 21B / 22B / 0HB / 0EB / 0CB / 0BB / 0AB						
	325		20B / 21B / 22B / 23B / 0DB						
	478		23B / 22B / 21B / 20B / 0MB						
	057	SI	17B / 18B / 19B / 20B / 0LB / 0GB / 0FB / 0EB / 0CB		A / B / C / D / E / F / G / H / I				
	081		18B / 19B / 20B / 21B / 0KB						
	114		18B / 19B / 20B / 21B / 0JB / 0FB / 0EB / 0CB / 0BB						
	162		19B / 20B / 21B / 22B / 0IB						
	229		19B / 20B / 21B / 22B / 0HB / 0EB / 0CB / 0BB / 0AB						
	325		20B / 21B / 22B / 23B / 0DB						
	478		23B / 22B / 21B / 20B / 0MB						

With the options DL and SI (ABZ enabled) the maximum resolution on the ABZ channel is 20 bits. If the resolution selected for the particular ring is higher than 20 bits, the ABZ resolution remains at 20 bits.

Table of available resolutions (DBL/DBF readhead with SAS19 or DS19 scale/FlexAB scale)

Readhead	Linear/partial arc scale	Interpolation factor	Resolution in µm	Position data length	Resolution part number
DBL / DBF	001 / 002 / 003 / 004 / xxx	14	0.122070313	28	14U
		13	0.244140625	27	13U
		12	0.48828125	26	12U
		11	0.9765625	25	11U
		10	1.953125	24	10U
		09	3.90625	23	09U
		08	7.8125	22	08U
		07	15.625	21	07U
		06	31.25	20	06U
		05	62.5	19	05U
		04	125	18	04U
		8000	0.25	27	8D0
		4000	0.5	26	4D0
		2000	1	25	001
		1000	2	24	002
		400	5	23	005
		200	10	22	010
		20000	0.1	29	10D
		10000	0.2	28	20D

Table of available combinations (DBL/DBF readhead with SAS19 or DS19 scale/FlexAB scale)

Series	Linear/partial arc scale	Output type	Resolution	N/A	Minimum edge separation	N/A	N/A	Connector type	Special requirements
DBL / DBF	001/ 002 / 003 / 004 / xxx	DB	14U / 13U / 12U / 11U / 10U / 09U / 08U / 07U / 06U / 05U / 04U / 8D0 / 4D0 / 001 / 002 / 005 / 010 / 10D / 20D	A	A	S	000	H / V	00 / 01 / 02 / 03
		DL			A / B / C / D / E / F / G / H / I				
		SC			A				00 / 01
		SI			A / B / C / D / E / F / G / H / I				

Accessories



USB interface (BISS C bidirectional output)

E201-9B

For use with options DB and DL.



USB interface (ABZ incremental output)

E201-9Q

For use with options DL and SI for the incremental output.



USB interface (SSI output)

E201-9S

For use with option SC.



Cable assembly, 1m

ACC023



Flat bracket for DBL and DBR readheads

ACC079



Square bracket for DBL and DBR readheads

ACC080

Cable assembly

Cable specification

Part number	Length	Diameter	Connector 1	Connector 2	Notes
ACC023	1 m	5 mm	Molex 501330-1200	Flying leads	Twisted pairs, shielded

Dimensions

Dimensions in mm.

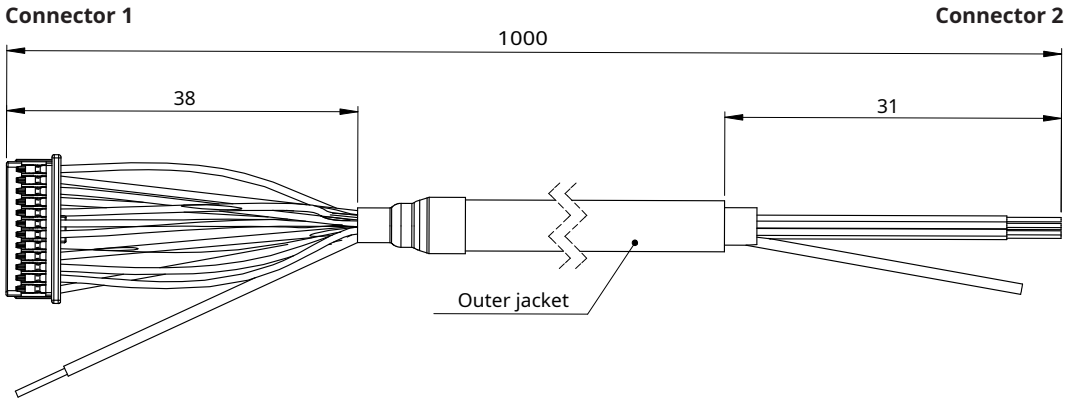

Pinout

Molex 501330-1200		
Pin number	**Signal**	**Color**
1	Z–	Grey
2	Z+	Pink
3	B–	Red
4	B+	Blue
5	A–	Yellow
6	A+	Green
7	GND	White
8	Vin	Brown
9	SLO– (data)	Red/Blue
10	SLO+ (data)	Grey/Pink
11	MA– (clock)	Black
12	MA+ (clock)	Violet

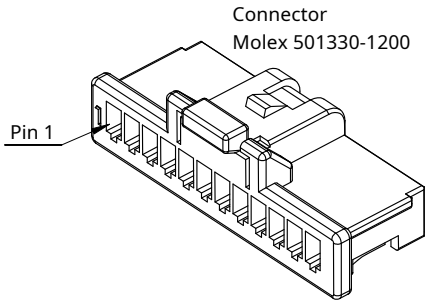

Packaging

Less than 20 readheads are packed individually in antistatic boxes. From a quantity of 21 pieces or more, the readheads are packed in antistatic trays (see table below). The trays are packed together in a cardboard box (8 trays per box).

Part	Tray size	Box size
Artos™ readhead	15 units per tray	8 trays per box

Head office

RLS Merilna tehnika d. o. o.

Poslovna cona Žeje pri Komendi
Pod vrbami 2
SI-1218 Komenda
Slovenia

T +386 1 5272100
E mail@rls.si

www.rls.si

Global support

Visit our **website** to contact your nearest sales representative.

Document issues

Issue	Date	Page	Description
12	12. 6. 2026	23	Note amended
		General	Document structure updated
13	21. 10. 2026	7	Reference for readhead orientation added

This product is not designed or intended for use outside the environmental limitations and operating parameters expressly stated on the product's data sheet. Products are not designed or intended for use in medical, military, aerospace, automotive or oil & gas applications or any safety-critical applications where a failure of the product could cause severe environmental or property damage, personal injury or death. Any use in such applications must be specifically agreed to by seller in writing, and is subject to such additional terms as the seller may impose in its sole discretion. Use of products in such applications is at buyer's own risk, and buyer will indemnify and hold harmless seller and its affiliates against any liability, loss, damage or expense arising from such use. Information contained in this data sheet was derived from product testing under controlled laboratory conditions and data reported thereon is subject to the stated tolerances and variations, or if none are stated, then to tolerances and variations consistent with usual trade practices and testing methods. The product's performance outside of laboratory conditions, including when one or more operating parameters is at its maximum range, may not conform to the product's data sheet. Further, information in the product's data sheet does not reflect the performance of the product in any application, end-use or operating environment buyer or its customer may put the product to. Seller and its affiliates make no recommendation, warranty or representation as to the suitability of the product for buyer's application, use, end-product, process or combination with any other product or as to any results buyer or its customer might obtain in their use of the product. Buyer should use its own knowledge, judgment, expertise and testing in selecting the product for buyer's application, end-use and/or operating environment, and should not rely on any oral or written statement, representation, or samples made by seller or its affiliates for any purpose. EXCEPT FOR THE WARRANTIES EXPRESSLY SET FORTH IN THE SELLER'S TERMS AND CONDITIONS OF SALE, SELLER MAKES NO WARRANTY EXPRESS OR IMPLIED WITH RESPECT TO THE PRODUCT, INCLUDING ANY WARRANTY OF MERCHANTABILITY OR FITNESS FOR ANY PARTICULAR PURPOSE, WHICH ARE DISCLAIMED AND EXCLUDED. All sales are subject to seller's exclusive terms and conditions of sale which, where the seller is (a) RLS Merilna tehnika d. o. o., are available at www.rls.si/customer-service, (b) Renishaw, Inc., are available at www.renishaw.com/Shop/legal/en/--42186, or (c) another person, are available on request, and in each case, are incorporated herein by reference, and are the exclusive terms of sale. No other terms and conditions apply. Buyer is not authorized to make any statements or representations that expand upon or extend the environmental limitations and operating parameters of the products, or which imply permitted usage outside of that expressly stated on the data sheet or agreed to in writing by seller.

RLS Merilna tehnika d. o. o. has made considerable effort to ensure the content of this document is correct at the date of publication but makes no warranties or representations regarding the content. RLS Merilna tehnika d. o. o. excludes liability, howsoever arising, for any inaccuracies in this document. © 2026 RLS d. o. o.